CARGO AIRCRAFT BOMBING SYSTEM

(CABS)

THESIS

Gurler Ari, 1LT, TUAF

AFIT/GSO/ENY/03-01

DEPARTMENT OF THE AIR FORCE
AIR UNIVERSITY

AIR FORCE INSTITUTE OF TECHNOLOGY

Wright-Patterson Air Force Base, Ohio

APPROVED FOR PUBLIC RELEASE; DISTRIBUTION UNLIMITED

The views expressed in this thesis are those of the author and do not reflect the official policy or position of the Department of Defense, the U. S. Government, or the Government of Turkish Republic.

AFIT/GSO/ENY/03-01

CARGO AIRCRAFT BOMBING SYSTEM

(CABS)

THESIS

Presented to the Faculty

Department of Aeronautical and Astronautical Engineering

Graduate School of Engineering and Management

Air Force Institute of Technology

Air University

Air Education And Training Command

In Partial Fulfillment of the Requirements for the

Degree of Master of Science (Space Operations)

Gurler Ari, BS

1 LT, TUAF

March 2003

APPROVED FOR PUBLIC RELEASE; DISTRIBUTION UNLIMITED

AFIT/GSO/ENY/03-01

CARGO AIRCRAFT BOMBING SYSTEM

(CABS)

Gurler Ari, BS
1 LT, TUAF

Approved:

_____/signed/_____ _____
Dr. Milton Franke (Chairman) Date

_____/signed/_____ _____
Dr. Curtis H. Spenny (Member) Date

_____/signed/_____ _____
Lieutenant Colonel David Jacques (Member) Date

Acknowledgements

First and foremost, I would like to express my sincere appreciation to my faculty advisor Dr. Tragesser and my thesis advisor Dr. Franke for their guidance and support during both my AFIT course work and my thesis research.

I would especially like to thank the love of my life, my wife, for the sacrifices she made during the period of AFIT. I also wish to thank my son, for his seemingly unending ability to provide a good "cry" and laugh and above all much enjoyment. I look forward to being a "real" husband and father to them in the very near future. I could not have accomplished any of my work without their support, encouragement and understanding.

Last but certainly not least, I would like to express my gratitude to Turkish Air Force who believed in me and gave me the chance and honor of completing my Master of Science degree in Space Operations in AFIT.

Gurler ARI

Table of Contents

Page

Acknowledgments iv

List of Figures vii

List of Tables ix

List of Abbreviations x

Abstract xii

1. Introduction 1

1.1. Background and Problem 1
1.2. Research Objectives 2
1.3. Methodology 3
1.4. System Design Approach to CABS 4
1.5. Scope of Research 8

2. Literature Review 9

2.1. Summary of Current Knowledge 9
2.2. Commando Vault (Daisy Cutter) 12
2.3. Future Offensive Air System (FOAS) 14

3. Definition and Concept Phases 15

3.1. Requirements and Constraints 16
3.2. Physical Characteristics, Performance and Operations of Cargo Aircraft 18
3.2.1. C-17 Globemaster III 18
3.2.2. C-5 Galaxy 23
3.2.3. C-141 Starlifter 26
3.2.4. C-130 Hercules 29
3.2.5. Summary of cargo bay sizes 31

3.3. Physical Characteristics, Performance and Operations of Missiles 32
3.3.1. Joint Stand off Weapon (JSOW) 32
3.3.2. Joint Air to Surface Standoff Missile (JASSM) 35
3.3.3. Standoff Land Attack Missile Expanded Response (SLAM-ER) 37
3.3.4. Low Cost Autonomous Attack System (LOCAAS) 39

Page

3.4. Function of Cargo Aircraft and Missiles 40
3.5. Interface of Cargo Aircraft and Missiles 45
3.6. Safety of Cargo Aircraft and Missiles 47
3.7. Availability of Cargo Aircraft and Missiles 49
3.8. Scenarios 52
3.8.1. Low Threat Environment 54
3.8.2. Medium Threat Environment 54
3.8.3. High Threat Environment 55

4. Design Phase 57
4.1. Tray/Spring Type Carrier/Launcher 61
4.2. Rotary Type Carrier/Launcher 70
4.3. Tray/Parachute extraction Type Carrier/Launcher 74
4.3.1. One Missile per Launch 75
4.3.2. One Tray per Launch 76

5. Summary, Conclusions, Discussion
and Suggestions for Future Studies 79

5.1. Summary 79
5.2. Conclusions 81
5.3. Discussion, and Suggestions for Future Studies 83

Appendix A 84
Appendix B 85
Bibliography 86
Vita 92

List of Figures

Figure Page

1.1. Design wheel 5

1.2. Making the transition from logical to physical design..... 7

2.1. Air launch and AltAir missile..... 11

2.2. BLU-82 Commando Vault (Daisy Cutter)..... 12

2.3. BLU-82 Bomb release sequence 13

3.1. C-17 aircraft 18

3.2. C-5 aircraft 23

3.3. C-141 aircraft..... 26

3.4. C-130 aircraft..... 29

3.5. Usable cargo bay end view..... 31

3.6. Cargo bay top view 31

3.7. JSOW missile 32

3.8. JASSM missile 35

3.9. SLAM-ER missile 37

3.10. LOCAAS missile 39

3.11. Qualitative representation of velocity vectors immediately aft of the ramp 43

3.12. Vertical velocity magnitudes immediately aft of the tailgate..... 44

3.13. Typical connections of MIL-STD-1760, MIL-STD-1553 and other related systems 47

4.1. C-17 sample CABS container and tray mechanism 62

4.2. C-17 sample CABS cargo bay layout 64

Figure Page

4.3. Frontal and side view of rotary part 70

4.4. Rotary part 71

4.5. Carriage and release systems 72

4.6. Sample C-17 cargo layout for rotary launcher 73

4.7. One missile per launch 75

4.8. One tray per launch 77

List of Tables

Table Page

3.1. C-17 Flight-Hour Mission Capable (MC) and Fully Mission Capable (FMC) percentages 21

3.2. C-17 Flight-Hour Mission Capable (MC) and Fully Mission Capable (FMC) standards 21

3.3. Cargo bay size 31

4.1. Cargo bay and missile volumes 58

4.2. Maximum number of missile carriage according to volume..... 58

4.3. Maximum number of missile carriage according to mass 59

4.4. Operational maximum carriage according to mass 59

4.5. Fighter and bomber aircraft maximum missile carriage capabilities..... 59

4.6. Minimum force required launching the missiles 66

4.7. Spring specifications 67

4.8. Tray/Spring type carrier maximum missile carriage 68

4.9. Missile cost of full carriage 69

A.1. U.S, European Union, and former Soviet Union SAM systems..... 84

B.1. Minimum force required (N) 85

B.2. Minimum force required (lbf) 85

List of Abbreviations

AAR	Air-to-air Refueling
ABCCC	Airborne Battlefield Command, Control and Communications
AFMC	Air Force Material Command
AGL	Above Ground Level
AJGPS	Anti-Jam Global Positioning System
ATA	Automatic Target Acquisition
ATACMS	Army Tactical Missile System
AWFCS	All Weather Flight Control System
CABS	Cargo Aircraft Bombing System
CADS	Combat Aerial Delivery School
CALCM	Conventional Air Launched Cruise Missile
CAP	Combat Air Patrol
CAS	Close Air Support
CFD	Computational Fluid Dynamics
DSHTW	Direct Strike Hard Target Weapon
FLIR	Forward Looking Infra-red
FMC	Fully Mission Capable
FOAS	Future Offensive Air System
GAMC	Global positioning system Aided Munitions
GATM	Global Air Traffic Management
GBU	Guided Bomb Unit
GCAS	Ground Collision Avoidance System
GP	General Purpose
GPS	Global Positioning System
HARM	High Speed Anti-Radiation Missile
ICBM	Intercontinental Ballistic Missile
IIR	Imaging Infrared
INS	Inertial Navigation System
JASSM	Joint Air-to-Surface Standoff Missile
JDAM	Joint Direct Attack Munition
JSF	Joint Strike Fighter
JSOW	Joint Standoff Weapon
LAPES	Low-altitude Parachute Extraction System
LGB	Laser Guided Missile
LOCAAS	Low Cost Autonomous Attack System
MAFIS	Multi-Application Fuse Initiation System
MC	Mission Capable
MEADS	Medium Extended Air Defense System
MLRS	Multiple Launch Rocket System
MPRL	Multi-Purpose Rotary Launcher
NAEW	NATO Airborne Early Warning
NAIC	National Air Intelligence Center

NVG	Night Vision Goggle
O&S	Operating and Support
ORD	Operational Requirements Document
PDM	Program Depot Maintenance
PIV	Particle Image Velocimetry
RAF	The Royal Air Force
RERP	Reliability Enhancement & Reengining Program
SAM	Surface to Air Missiles
SEAD	Suppression of Enemy Air Defense
SLAM-ER	Standoff Land Attack Missile
SOLL	Special Operations Low-Level
UAV	Uninhabited Aerial Vehicles
WCMD	Wind Corrected Munitions Dispenser
WPAFB	Wright Patterson Air Force Base

AFIT/GSO/ENY/03-01

Abstract

From the early days of aviation, bombs typically have been carried by either fighter or bomber aircraft in the inventory. On the other hand, more and more long-range, precision-guided missiles are being produced with ranges that vary from tens to hundreds of miles. With such missiles, targets can be destroyed without placing personnel and equipment into close proximity to the targets. The mass delivery of standoff weapons could be especially advantageous during the early phases of an air campaign. This study considers the use of cargo aircraft for carrying and launching bombs and missiles. It has discussed many aspects of a Cargo Aircraft Bombing System (CABS) and provided an overall view. The intention of the study was not to complete design details about CABS, but rather to identify preliminary design concepts that need to be considered in a CABS. The study considered and provided background information on four carrying platforms including the C-17, C-141, C-130 and C-5, and four types of precision guided missiles including JSOW, JASSM, SLAM-ER and LOCAAS. Based on the four platforms and four missiles, particular issues were considered concerning systems and three preliminary carriage and release designs have been proposed.

CARGO AIRCRAFT BOMBING SYSTEM

(CABS)

1. Introduction

1.1. Background and Problem

From the early days of aviation, bombs typically have been carried by either fighter or bomber aircraft. Most of the concepts and tactics for the warfighter were created and maintained based upon those assumptions. For example, flying formations of fighter and bomber aircraft were created for maximum mutual support. Tactics for delivering general purpose (GP) bombs to highly protected targets differ according to the aircraft's unique maneuverability and self-protection capability. Moreover, the agility of fighter aircraft allows them to escape from land-based missiles by maneuvering. If one asks a fighter pilot if munitions can be launched from a cargo aircraft or not, he would probably say no. Cargo aircraft are designed to carry and transport cargo and people as well as other equipment. They are slow and their maneuverability and threat-avoidance/defeating capabilities are limited. Moreover, their crew are trained to deliver cargo not bombs.

On the other hand, more and more long-range, precision-guided missiles are being produced with ranges that vary from tens to hundreds of miles. With such missiles, targets can be destroyed without placing personnel and equipment into close proximity to

the targets. Especially in the first days of an air campaign, many targets must be identified and destroyed, which requires a lot of fighter and another bomber sorties.

The mass delivery of standoff weapons could be especially advantageous during the early phases of an air campaign when the enemy has a large fixed target set and its defense system is undamaged. Although mounting as many as 100 missiles on one airframe may not appear to be feasible and highly risky, a C-17 delivering 50 or C-5 delivering 90 standoff weapons in a single sortie could greatly speed up the prosecution of an air campaign. With survivability of people and effectiveness of the overall air campaign in mind, the more the Air Force uses effective standoff weapons, the more hostile targets can be destroyed without jeopardizing lives and expensive weapon systems. Besides, an aircraft that carries 100 standoff missiles in a single sortie would greatly change the prosecution of the air war.

This study explores the potential of cargo aircraft to carry standoff missiles. Most cargo aircraft can carry more missiles than many bomber and fighter aircraft in the inventory. If standoff missile launching capability could be economically developed for cargo aircraft, fighter and bomber aircraft would be more readily available to deliver unguided bombs and/or laser-guided bombs like JDAM or LGB.

1.2. Research Objectives

The objective of the research is two fold. First, the study will consider the philosophical or doctrinal feasibility of using cargo aircraft in a bombing role. Second, if the use of cargo aircraft in bombing role is found to be feasible, the study will propose

and discuss the features of a reusable Cargo Aircraft Bombing System (CABS) that can carry and launch missiles.

1.3. Methodology

A systems design approach will be followed throughout the study, which will be explained in detail in this section. The study will investigate the philosophical and doctrinal aspects of using cargo aircraft in bombing role and then consider the system requirements, needs, and numerous variables. Capturing all of the system requirements and interdependencies among sub-systems will be examined. Physical characteristics, operational needs, performance, interface requirements, functional and safety issues will be described. Also, personnel training, and deployment issues will be considered. Additionally, technology issues, operational and functional aspects, risk, reliability, availability and maintability issues will be reviewed. Some mission scenarios will be identified that will indicate which aircraft/missile combinations are feasible.

The second phase of the study will propose a reusable system and alternatives on paper that could carry and launch a given number of missiles from various carriage platforms. Some aerodynamic and cost issues will be stated as well.

A system design approach can aid in the development process of complex aircraft systems. The purpose of this study is not to create a complete design, but to give the readers an appreciation of the depth and extent of the issues that need to be addressed.

1.4. System Design Approach to CABS

Designing aircraft systems has been a challenge for people for a long time. Aircraft systems are becoming more complex and more sophisticated because of the growing technology and performance needs. As Moir stated : "The increasing level of system sophistication and increased interrelation of systems is also making the development process more difficult."(79). He also continued, "The ability to capture all of the system requirements and interdependencies between systems has to be established at an early stage in the programme. Safety and integrity analyses have to be undertaken to ensure that the system meets the necessary safety goals, and a variety of other trade studies and analytical activities have to be carried out." (79).

When talking about systems design, one usually begins with requirements. Design is an iterative effort as shown in Figure 1.1. Requirements are set by prior design trade studies. Concepts are developed to meet requirements. "Design analysis frequently points toward new concepts and technologies which can initiate a whole new design effort" (80).

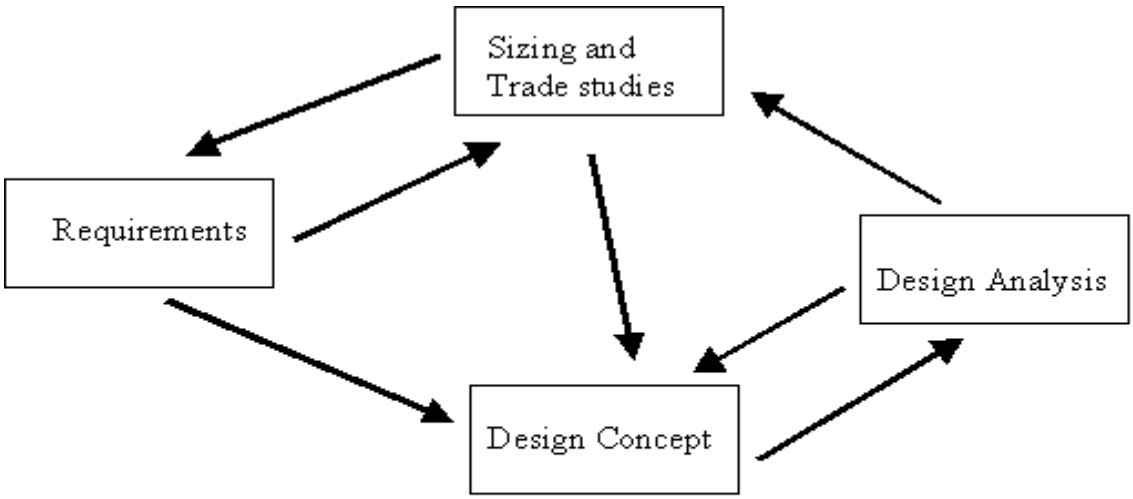

Figure 1.1. Design wheel (80)

Basically, the development of an aircraft system consists of a number of phases that includes definition, concept, design, building, test, and operation (79).

In the definition phase of the study, understanding the needs of the user is paramount. The user continuously appraises his present resources and verifies their ability to meet future requirements. What is wrong with the current situation? The establishment and understanding of main role and functions of the required system is very important. Physical characteristics of main system and subsystems and technology issues must be clearly articulated. Requirements and needs are the main drivers of this phase. So after each step of the process, requirements and needs have to be reconsidered. Also risk, reliability, availability and maintability issues have to be taken into the consideration.

In the concept phase, a system solution is defined that satisfies the user's requirements and needs. System architectures have to be defined by the designer. Typical considerations of this phase are operational needs, performance, interface requirements, functional issues, scenarios and safety issues.

A successful definition and concept phase is usually followed by the design phase. The architectures described in the concept phase are used to design the system. Rules, regulations, and safety standards should be met at this time. Modeling the proposed system is a very useful approach to change and re-evaluate the system components. Design tools may be used like computer software and general methods, which come from a variety of disciplines in order to analyze data during the design process (83).

The design on the paper and final physical design are different from each other. First, a preliminary design has to be introduced. Figure 1.2. illustrates the transition from logical to physical design (82).

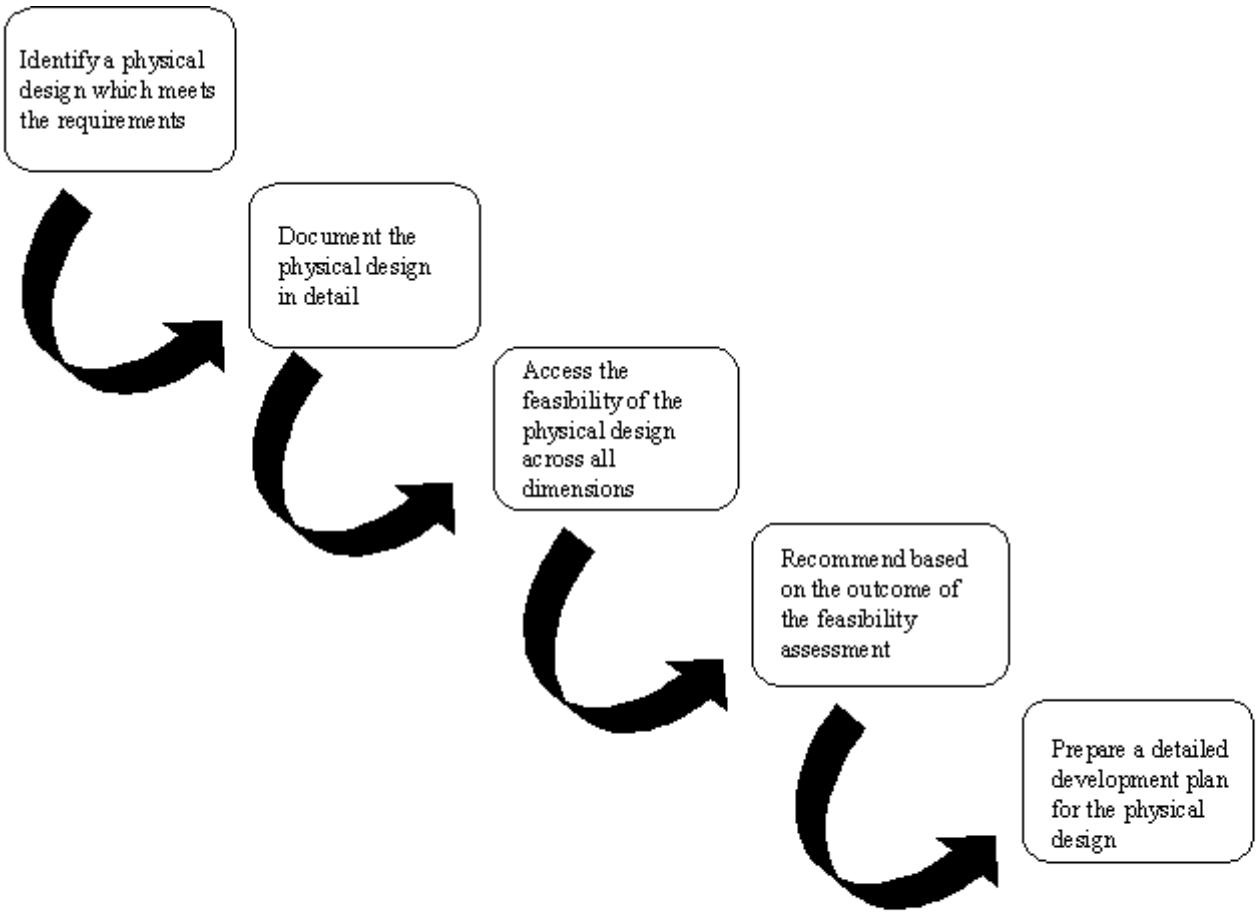

Figure 1.2.Making the transition from logical to physical design (82)

The building phase of the study consists of manufacturing of sub assemblies and finally the assembly of the system itself. For complicated systems like aircraft systems, the test phase can be carried out with the building phase. Ground and flight tests of the system will be done very rigorously. This phase tests the integration of the parts, components and installed sub-systems. The test data will be analyzed and that iterative

process continues until the desired level of performance acquired. After all, the associated design, analysis and documentation process will be done.

Finally, in the operation phase of the study, the user operates the system. Its performance is being monitored in real situations. The user reports the component failures, design errors, operator mishandlings or other performance criteria. The design is such an iterative process that rectification and upgrade of the problems have to be done by the designer at any time of the design process (79).

1.5. Scope of the research

The scope of the study will be very broad and because of that, every aspect of such a system has to be searched and articulated clearly. Therefore, the information will not be detailed to a great extent. The preliminary design will be done after stating every aspect of the system; several alternative designs will be stated.

Considering time and the breadth of the study, the first three phases of the system design process, concept, definition and design phases will be covered. As stated in previous section, definition and concept phases are combined in the study. All specific areas explained above related with CABS will be examined. In the design phase, a preliminary design of the CABS will be done and alternative release systems will be introduced.

2. Literature Review

2.1 Summary of Current Knowledge

In general, air-to-ground munitions can be categorized as bombs and missiles. Missiles have various propulsion and guidance systems and are more autonomous than the bombs. Bombs, which are unpowered can also be guided several ways. Bombs which are guided with the assistance of built-up guidance kits are typically called laser-guided bombs (LGBs) and mainly apply to general purpose bombs. The kits are composed of one computer control group that allows the bomb to fly in a desired flight path and guidance canards mounted to the back of the bomb. The most used and known LGBs are GBU-12 PAVEWAY II, GBU-10 PAVEWAY II and GBU-24 PAVEWAY III. There also exists Global Positioning System (GPS) guided bombs. These bombs mainly use their GPS/INS powered tail kits to provide higher strike accuracy. The most popular and widely used GPS guided bombs are, the Joint Direct Attack Munitions (JDAM), Direct Strike Hard Target Weapon (DSHTW) and Global Positioning System Aided Munitions (GAM).

Powered missiles are mainly used in tactical operations because of their long range and guidance accuracy. They can use electro optical, laser, infrared or GPS/INS for guidance and control. The most widely used missiles are the High Speed Anti-Radiation Missile (HARM), Maverick, Tomahawk land attack cruise missile, Harpoon anti-ship missile, Conventional Air Launched Cruise Missile (CALCM), Joint Standoff Weapon (JSOW), Joint Air-to-Surface Stand off Missile (JASSM) and Standoff Land

Attack Missile (SLAM-ER). This study will consider JSOW, JASSM and SLAM-ER, since these missiles are typical for various air campaigns. Also the study will evaluate a future concept LOCAAS (Low Cost Autonomous Attack System) that will enter the service approximately 2010 (11) .

Currently, bomber and fighter aircraft that were designed to penetrate and survive hostile air defense systems deliver bombs and missiles. Moreover, in addition to the aircraft, the Navy launches missiles from warships, aircraft carriers, and submarines. Tomahawk for example, is a submarine or ship-launched, land-attack cruise missile widely used by U.S Navy. Tomahawk was used extensively during Desert Storm in 1991 and Deliberate Force in Bosnia in 1995 and launched by warships, aircraft carriers, and submarines (85). Another cruise missile, Conventional Air Launched Cruise Missile (CALCM) is designed to be launched from B-52 bombers. Presently, the B-52H can carry six CALCMs on each of two externally-mounted pylons and eight internally on a rotary launcher (86).

Carrying and launching bombs or missiles from cargo aircraft has always been an issue to the United States Air Force. In 1960, Skybolt Air-Launched Ballistic Missile program was initiated, which was an effort by the Air Force to exploit B-52 bombers as ballistic missile launchers. The program included building and dropping full-size dummy missiles from B-52 and British Vulcan B2 aircraft. After unsuccessful test drops, the program was cancelled in 1962 (87). During the Cold War period, the Air Force initiated a program to launch a Minuteman I ballistic missile from a C-5 to decide feasibility of ballistic missile air launch in 1974(88). But this airborne launch program was again found unfeasible and cancelled (89). In 1996, Space Vector Corporation (SVC) initiated a

program under control of the National Air Intelligence Center (NAIC) at WPAFB called AltAir. The purpose of the program was to develop and demonstrate an air-launch target missile system to provide a realistic threat simulation for testing long-ballistic missile defense systems. The scope of this program was to develop and verify the feasibility of a launch vehicle system from a military aircraft. The flight test was accomplished in 1997 from a C-130 and that verified the air launch feasibility as shown in Figure 2.1 (90).

Figure 2.1 Air launch and AltAir missile (90)

"The AltAir target vehicle, mounted on a transfer cradle, was deployed from the C-130 cargo bay using a drogue parachute. The target vehicle separated from the cradle during descent at a predetermined altitude. Two main parachutes were used to control the vehicle decent to approximately 5,000 feet. The SR19 rocket motor was ignited after main chute release. The vehicle's on board guidance system, coupled with its Global Positioning System (GPS), provided the required target placement accuracy and corrected for the deployment errors through real time retargeting within the first 10 seconds of powered boost. Although the booster, while on a proper guidance trajectory, was destructed at 28 seconds due to a flight control anomaly, the flight demonstration firmly established the feasibility of the Air Launch concept". (90)

Before these efforts, U.S Air Force used BLU-82 Commando Vaults in Vietnam named Daisy Cutter later. Recently, The British Royal Air Force has considered the use of C-130 for launching Conventional Air Launched Cruise Missiles (CALCM). Further review of the Air Force Commando Vault (Daisy Cutter) Bomb and the Royal Air Force's Future Offensive Air System (FOAS) is presented in 2.2 and 2.3.

2.2. Commando Vault (Daisy Cutter)

Figure 2.2. BLU-82 Commando Vault (Daisy Cutter) (91)

The BLU-82 weapon is the largest general purpose bomb which is also known as Commando Vault or Daisy Cutter. This 15,000 pound conventional bomb system that has been dropped from a C-130 aircraft was used for carving out helicopter landing zones in the jungles of Vietnam without digging a crater and as an anti-personnel and intimidation weapon in Afghanistan (92). Eleven BLU-82s were dropped during Desert Storm to test the capability of mine clearing and their destructive power as well their psychological effect on Iraqi troops (92). The BLU-82 is 4.5 feet in diameter and approximately 12 feet long. It contains 12,600 pounds of GSX explosive slurry (ammonium nitrate, aluminum powder, and polystyrene), and is equipped with a conical aerodynamic nose cone and tipped with a 38-inch standoff detonator (93). When detonated, it creates a blast wave of over 1,000 psi, clearing an area of approximately 300 ft in diameter (93). The bomb itself is unguided and operates with a drogue parachute to both orient the weapon and to control its rate of descent. Prior to deployment the BLU-82

is mounted on a sled-like loading/delivery pallet as shown in Figure 2.2. To launch the bomb, a cargo extraction parachute is deployed which pulls the palletized bomb out of the aircraft. Once the bomb has left the aircraft a static line automatically deploys the bomb stabilization chute. The cargo extraction chute and delivery frame are both discarded once the bomb stabilization chute deploys. The launch sequence is shown in Figure 2.3. To avoid collateral damage to the dropping aircraft, BLU-82 must be dropped from at least 6,000 feet above ground level (AGL).

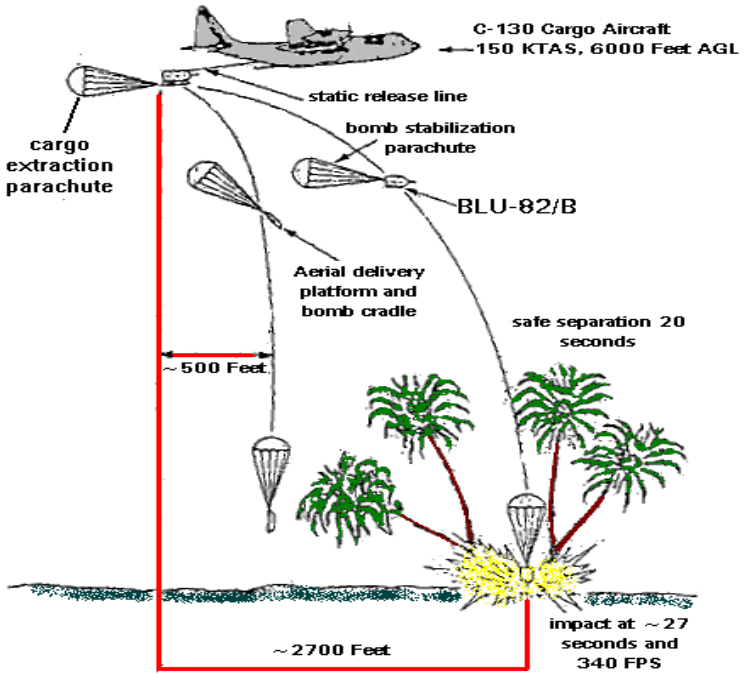

Figure 2.3. BLU-82 Bomb release sequence (92)

2.3. Future Offensive Air System

The Future Offensive Air System (FOAS) is the name given to a number of concept options being investigated by the United Kingdom Ministry of Defense to replace the capabilities provided by the Tornado GR4 aircraft. FOAS is a comprehensive strike system, which includes a Conventional Air Launched Cruise Missile (CALCM), launched from a large non-penetrating aircraft like the C-130 or C-17 together with other fighter and bomber aircraft carrying other types of bombs and Uninhabited Aerial Vehicles (UAV's). The aircraft and airborne systems developed under FOAS initiative are expected to become operational around year 2017 when the Tornado GR4's have reached the end of their operational lives (21).

The FOAS concept is more meaningful than Tornado replacement. According to Morocco: "FOAS is evaluating a board range of advanced technologies and products which could be combined together to meet deep strike requirements, as well as provide the means to upgrade existing systems"(84).

The study has three phases. The first two phases were focused on platform carriage and release concepts and were completed in March 2002. Phase three which began in April 2002 focuses on weapon concepts, performance, and future development of related technologies. There are still many things to be considered and accomplished; however, the FOAS concept would provide a self-reliant, flexible, multi-role capability requiring minimal logistic support to the commander in charge. It could enter the service earlier than anticipated in the Royal Air Force (84).

3. Definition and Concept Phases

Designing aircraft systems has been a challenge for humankind. It is an iterative and complex process. From open literature sources, it typically takes some 10 years to design and build an aircraft that is operational, even when the best approaches are used. In this chapter some particular needs and requirements for Cargo Aircraft Bombing System (CABS) are expressed. Additionally, some constraints are articulated about aircraft and missiles.

In considering the definition and concept phases of the study, the physical characteristics, performance and operational aspects of several aircraft and several missiles including reliability and maintainability issues are described individually. These physical characteristics, performance and operations explain how cargo aircraft and missiles operate in Air Force and will have big impact on the design.

The integration of different types of aircraft and different missiles has always been difficult, since operational aspects of each aircraft and missile have to be considered. Although all of the carriage platforms considered in this study are basically cargo aircraft and all missiles are air-to-ground missiles, the way they are used in the Air Force differs. Currently, missiles are carried on fighter or bomber aircraft in the Air Force, whereas the Navy tends to deploy missiles from fighters, ships and aircraft carriers. The Army is likely to carry missiles on motor vehicles and helicopters. In fighters, bombs and missiles are either carried single or multiple with special and various bomb racks located under the wings or fuselage. In bombers, bombs and missiles are usually carried inside bomb bays, where bombs or missiles are held by bomb racks or

rotary launchers. In cargo aircraft, the missiles would normally be carried in the cargo bay thus, the dimensions of the cargo compartments of the aircraft are very important for this study.

The function of the aircraft and missiles are examined in this part as well. While cargo aircraft are designed to carry missiles as cargo, supplementary systems will be needed to be installed if missiles are to be launched. Interface requirements are examined in this part of the study. The safety standards of each item are described. The availability of cargo aircraft and missiles are considered. Finally, some scenarios are created to show which aircraft and missile combinations can be used and how in this chapter.

3.1. Requirements and Constraints

Some particular needs, requirements and constraints are described for a CABS in this definition and concept phase as follows:

Requirements

- A reusable system that can carry given number of missiles depending on the missiles,
- A scalable system is desired to fit into every carrying platform,
- A system that can deliver missiles such as JSOW, JASSM, SLAM-ER and LOCAAS,
- Low life cycle cost is preferred,
- Maximum combat effectiveness,
- Minimum change to the existing cargo bay,

- Low additional weight,
- Low risk, high reliability/maintainability/availability,
- Easy to install and remove,
- Easy to operate,
- Maximum performance/system support/effectiveness,

Constraints

- Safety (Minimum danger or harmful effect),
- Cost and funding,
- Technological,
- Regulations,
- Personnel deployment and training,
- Storage and deployment of missiles and systems abroad,
- Dissemination of technical data and manuals.

3.2. Physical Characteristics, Operations and Performance of Cargo Aircraft

3.2.1. C-17 Globemaster III

Figure 3.1 C-17 Globemaster III (13)

The length of usable cargo compartment of the C-17 cargo compartment from the end of the loadmaster's station to the ramp is approximately 65 ft (1), which is the maximum length available for use of the CABS. The width of the cargo compartment is 18 ft and the C-17 can do dual airdrop (the width can be divided into two equal sections available for the CABS). Dual airdrop means, the palletized or floor loaded cargo is loaded side by side into the cargo bay and can be air-dropped side by side as well. At the center of wingbox, the maximum height accessible for the CABS is approximately 12 ft. The cargo door of the C-17 consists of two parts. Lower aft cargo door which is called ramp can be tilted 9 degrees down and 10 degrees up on the ground or in the air. The ramp can be lowered below 250 knots in the air (2). The upper aft cargo door connected to the tail can go up until it hits the bottom of the fuselage which enables the easy cargo loading to the aircraft, and while in an air drop operation it stays in the up position.

The C-17 is capable of delivery of outsize combat cargo and equipment directly into remote and unprepared airfields. It can deliver passenger and cargo over intercontinental distances, provide theater and strategic airlift, and perform special operations missions. Its biggest involvement to the current airlift system is long-range direct delivery. The C-17 is capable of fast strategic delivery of troops and all types of cargo to main operating bases in Europe, Middle East or Pacific or directly to forward bases in the deployment area (14). When required the aircraft can also perform theater airlift missions like humanitarian help and food drops in Afghanistan. With its air refueling capacity, the C-17 can perform various missions to anywhere in the world (13). With its high-impact landing gear system and with the help of forward and upward thrust reverser system, the C-17 can take off and land on runways as short as 3,000 ft and as narrow as 90 ft wide. Its cargo door, ramp design and cargo restraint systems can be operated by a single loadmaster. Instantaneous equipment offload without any particular handling equipment can be done with its design. The C-17 uses a propulsive lift system that enables engine exhaust to supplement lift production. It directs engine exhaust onto large extended flaps, and by the help of that extra lift the C-17 can make slow, steep approaches with heavy cargo loads (12). Additionally, the C-17 offers unique capabilities of its kind that include a supercritical wing and winglets design, externally blown flaps, high impact landing gear, direct lift-control spoilers and in-flight refueling capability, a two-person cockpit, and maximum use of built-in test equipment to reduce maintenance troubleshooting times. For the arising current and future requirements, the aircraft will have some modifications such as Global Air Traffic Management (GATM) system and automatic dependent surveillance system for navigation purposes.

The aircraft is operated by three aircrew members (pilot, copilot and loadmaster). It has a maximum cargo capacity of 170,900 lbf and a maximum gross takeoff weight of 585,000 lbf (13). With 130,000 lbf payload on board and with an initial cruise altitude of 28,000 ft, the C-17 has range of approximately 5,200 nautical miles without air refueling. Its cruise speed is about 450 knots (Mach number ≈ 0.77) (13). The C-17 aircraft can be configured for cargo, paratroopers, combat troops, hospital litter patients, or combinations of all of these. Its main duty is strategic airlift and delivery of cargo, but it also can be employed for LAPES (low-altitude parachute extraction system) delivery of cargo.

For threat avoidance, the C-17 is equipped with AN/AAR-47 missile warning system and AN/ALE-47 countermeasure flare dispensers (13). The AN/AAR-47 is a passive missile warning system that detects the thermal signature of the threat missile exhaust plume by using thermal sensors around the aircraft. The system provides a warning to the crew by the cockpit indicator unit. AN/ALE-47 is capable of carrying a mix of countermeasures including jammers. The system directly interfaces with the aircraft's sensors, and the aircrew can select the mode of operation of the dispenser. The ALE-47 is capable of dispensing new generation active expendable decoys as well as conventional chaff and flare decoys in the inventory.

McDonnell Douglas labeled a service life of 30,000 hours for C-17s (34). The C-17 program passed the 296,000 flight-hour mark in August 2001. Reliability usually is expressed in the Air Force by mission capable (MC) and fully mission capable (FMC) percentages. Mission capability is simply the time an aircraft is available to perform a mission. Fully mission capability indicates whether the aircraft can perform every

mission it was designed to do. MC and FMC percentages and standards are given in the Table 3.1 and Table 3.2 (34). Note that the results in Table 3.1 are the monthly averages for the selected periods and the standards in Table 3.2 for MC are minimum acceptable values, whereas FMC standards are estimated objective values given in operational requirements document (ORD) and Air Force Material Command (AFMC) Standards Document.

Table 3.1 C-17 Flight-Hour Mission Capable (MC) and Fully Mission Capable (FMC) percentages (34)

	Jun 93-Aug 95	**Sep 95-Aug 97**	**Sep 97-Sep 99**	**Oct 99-Sep 01**
MC	30.5-83.5%	75.7-93.0%	81.7-91.1-%	78.6-85.9%
FMC	0-74.4%	7.8-75.0%	41.6-71.5%	37.6-64.3%

Table 3.2 C-17 Flight-Hour Mission Capable (MC) and Fully Mission Capable (FMC) standards (34)

	1993 ORD	**1998 ORD**	**AMC FY98 Standards**
MC	82.5%	90.0%	87.5%
FMC	74.7%	80.0%	77.5%

For the maintainability of the aircraft, the Air Force usually describes maintenance man-hours per flying hours. In general, low maintenance man-hours is desired to show the high maintainability of the aircraft. Currently, the C-17 requires 18.6 aircraft maintenance man hours per flying hour (59).

There are still debates going on about C-17 program. The program's cost has already been exceeded and continues to rise. In 1995, a cost and operational effectiveness analysis indicated that, forty C-17s and sixty-four commercial freighters could satisfy airlift requirements of the time and could save $10.7 billion or more compared to a fleet of 120 C-17s, although C-17 is the preferred airlifter (55). In August 2002, the Air Force signed a contract with Boeing for additional 60 C-17s for $9.7 billion. Currently, the Air Force has acquired its 100th C-17, and total of 180 aircraft will be delivered through 2008 (56). The total program approved cost is approximately $45 billion or an expected unit cost of approximately $ 232 million in FY01 constant dollars (57). The annual operating and support (O&S) cost of a C-17 is $7.5 million (58).

3.2.2. C-5 Galaxy

Figure 3.2 C-5 Galaxy (18)

The C-5 has the largest carriage platform in the inventory of cargo aircraft. The length of the usable cargo compartment of the C-5 is approximately 107 ft. Features unique to the C-5 include the forward cargo door (visor) and ramp and the aft cargo door system and ramp. These features allow drive-on/drive-off loading and unloading as well as loading and unloading from either end of the cargo compartment. The maximum available width of the cargo compartment is 19 feet. The maximum available height for cargo is approximately 13 ft. (5). With its upward-hinged visor in the nose and outward-opening "clamshell" doors in the rear, the C-5 accommodates drive-through loading/unloading of wheeled or tracked vehicles using full-width ramps at each end. In flight, the ramp can be lowered at speeds below 250 knots like the two other aircraft (6).

The C-5A/B Galaxy is a conventional high-wing, T-tailed transport aircraft designed to provide strategic airlift for intercontinental range deployment and supply of combat and support forces in the theater (17). It carries outsize and oversize cargo and is

mainly designed to work with its sister transport, the C-141 Starlifter. C-5s require hardened runway except in an emergency, so they are generally used to transport cargo to midway points with suitable airfields. From there the cargo or personnel can be transferred to a C-141 and flown into remote areas (17). Nowadays C-17s take up more of the role of C-141s because of their unique characteristics. Presently, the C-5 is not usually employed for airborne operations and, excluding emergencies or atypical circumstances, the C-5 does not carry troops in the lower-deck cargo compartment (17). Seventy-three seats are available in the back compartment of the upper deck for personnel and operators. Maximum cargo capacity of the C-5 is 270,000 lbf, and it has a maximum gross takeoff weight of 769,000 lbf. With 202,500 lbf payload on board and with an initial cruise altitude of 27,000 ft, the C-5 has a range of approximately 5,000 nautical miles without air refueling. Its cruise speed is about 450 knots (Mach number ≈ 0.77) (17). The flight crew numbers six, including pilot, copilot, two flight engineers, and two loadmasters. Like C-141s, the C-5 fleet has had various modifications. In 1982, 50 of 81 old C-5As began an upgrade to C-5Bs. That program included the new wing, upgraded engines, a new weather radar and Inertial Navigation System (INS). Moreover, the landing-gear crosswind landing system of the C-5A, which had proven unreliable, was eliminated (18). All modifications of theC-5B were completed in 1989. Under a program designated PACER SNOW, two C-5s were fitted with countermeasures for special operations including AN/AAR-47 missile warning system and AN/ALE-40 countermeasure flare dispensers described previously. Two C-5As were modified for NASA to carry space shuttle payload bay cargo, and were given the new designation of "C-5C". In 2002, the Air Mobility Command operated 126 C-5s, including 74 C-5As,

50 C-5Bs, and two C-5Cs (17). The USAF now has programs to upgrade the C-5s to keep them flying until at least 2040. The most important part of this effort is the $7 billion USD "Reliability Enhancement & Reengining Program (RERP)", which will replace the current GE TF39 turbofan engines with modern GE CF6-80C2 turbofans (18). The program also entails some minor structural enhancements, new engine pylons, some enhancements to the aircraft's antiskid landing gear and climate-conditioning systems. Re-engining will begin in 2003, with the first re-engined aircraft flying in 2005, with initial operating capability in 2008. The program is expected to finish in 2010-2012 (19).

The C-5 has the lowest mission capable rate within the Air Mobility Command. The C-5 suffered from significant structure fatigue early in its lifetime, forcing all aircraft to be re-built with a new wing. The C-5 has the MC rate of 57 percent; that is well below desired limit of 75 percent. Compared with the C-17, MC rate of C-5 is approximately 25 percent lower. One reason for low-mission capability is high program depot maintenance time (PDM). Between the years 1993 and 1999, PDM was approximately 300 days. Between 1999 and 2001 that number was reduced to approximately 200-250 days range. Currently PDM is below 200 days (35). For maintainability, C-5B requires approximately 20 aircraft maintenance man hours, whereaes C-5A models requires 46 maintenance man hours per flying hour (59).

The entire C-5 fleet is in ongoing modification program called RERP at the moment. The C-5 RERP is the second phase of the Air Force's comprehensive modernization plan aimed at increasing fleet availability and reducing total cost of possession. With the modernization, C-5 operator bases can realize a 34 percent less

cost-per-flying-hour and 44 percent less cost per ton-mile of cargo. That means 20 percent less general cost of comparable new aircraft. The RERP program proposes GE CF6-80C2 engines and with the CF6 engines, the C-5's initial cruise ceiling will increase from 27,000 feet to 33,000 feet. Also, the new engines will provide the C-5 with 22 percent greater takeoff thrust, 30 percent less takeoff roll, and 58 percent less time to climb than with the current TF39 engines. Moreover, the re-engined aircraft will meet FAR 36, Stage 3 noise requirements (36). The annual operating and support (O&S) cost of C-5 is $12.1 million (58).

3.2.3. C-141 Starlifter

Figure 3.3 C-141 Starlifter (15)

The length of usable cargo compartment of C-141 is approximately 70 ft from the beginning of the cargo compartment to the ramp. The maximum allowable width of the cargo compartment is approximately 10 ft. The C-141 doesn't have dual airdrop capability. Under the center of wingbox the acceptable height of the aircraft is

approximately 9 ft (3). The cargo door of C-141 consists of 3 parts. The ramp can be tilted 10 degrees down on the ground and below 250 knots in the air (4). The other two parts, called clam-shell or petal doors, open up to each side while loading the cargo.

The C-141 aircraft was the first jet aircraft designed to meet military standards as a troop and cargo carrier. The C-141 can do a multitude of airlift and airdrop missions. It carries cargo or troops to long distances, supplies those forces and their equipment either by conventional landings or airdrops, does air hospital missions, and can manage all kind of airdrop missions. There are three versions of the C-141. The current C-141B is a stretched version of the original C-141A with in-flight refueling capability. The C-141B is about 23 ft longer than the C-141A, with cargo capacity increased by about one-third. The C-141C is a modernized and upgraded version of C-141Bs that includes an all-weather flight control system, a global positioning system, a fuel-quantity indicating system and an airlift defensive system (15). The flight crew numbers five, including pilot, copilot, navigator, and two loadmasters. The C-141 has a maximum cargo capacity of 94,500 lbf, and a maximum gross takeoff weight of 323,100 lbf. With 71,500 lbf payload on board and with an initial cruise altitude of 25,000 ft, the C-141 has range of approximately 2,100 nautical miles without air refueling. Its cruise speed is about 400 knots (Mach number ≈ 0.66) (15). Along with modifications like the All Weather Flight Control System (AWFCS) that includes a digital autopilot, advanced avionics display, and a Ground Collision Avoidance System (GCAS), a few Starlifters were modified to carry Minuteman ICBMs from the factory to operational bases. Thirteen of the C-141s have "Special Operations Low-Level II (SOLL II)" standard on board that includes an AAQ-17 "forward looking infra-red (FLIR)" imager, which gives the aircraft the ability

to "see in the dark", a combination of ALE-40 chaff-flare dispensers, an AAR-44 infrared missile warning sensor and an ALR-69 radar warning receiver (16). SOLLII crews are trained for night operations and use night vision goggles (NVGs). All SOLL II Starlifter cockpit and exterior lighting is NVG-compatible (16). Although a variety of upgrades have been done to C-141 fleet, they are expected to be out of first-line Air Force service by 2003 and retired from Reserve and Air National Guard service by 2006 (15).

In recent decades, the C-141 Starlifter has been a major player in airlift operations to Haiti, Somalia, Rwanda, and Bosnia. It was used very heavily in the Gulf War in 1991. After the Gulf War, structural problems led to some flight restrictions; nonetheless these problems were quickly resolved by a comprehensive repair program. The average mission capable rate of C-141 has been 61 percent. The standard mission capable rate is considered 80 percent by the Air Force Materiel Command (AFMC) for C-141 fleet. C-141s on the other hand, use approximately 26 aircraft maintenance man hours per flying hour (60). The C-17 will replace the C-141 nearly on a one to two basis, meaning that, there are fewer individual aircraft to spread around the globe although the tonnage that can be moved with the larger airplane is roughly the same. The C-141 has an annual operating and support (O&S) cost of $6 million (58).

3.2.4. C-130 Hercules

Figure 3.4. C-130 Hercules (70)

The C-130 Hercules is one of the most versatile aircraft in the Air Force inventory. Since its introduction into the Air Force inventory in 1955, the C-130 has served in a variety of operating environments and missions. From arctic regions to the desert, the C-130 fleet has delivered equipment, personnel, and supplies to locations all over the world. Over two thousand C-130s support the military operations of the United States and its Allies, as well as numerous commercial operations. Capable of landing and taking off from short, unprepared surfaces, the C-130 has been used in a wide variety of other roles than tactical airlift, such as gunships, weather watchers, aerial tankers, reconnaissance, command and control, search & rescue, electronic warfare, firefighters, and aerial ambulances (69). There are more than 40 versions of the C-130, and it is widely used by more than 50 nations (70).

The C-130 fleet in Air Force consists of several versions. Early models were retired and the D model was replaced with C-130H models. Primarily the C-130 E, H,

and J models are in current operation (70). The length of usable cargo compartment of C-130 E, H and J models is approximately 40 ft. The width of the cargo compartment is approximately 10 ft. At the center of the wingbox, the maximum height accessible is 9 ft. The newest and most versatile C-130J-30 is the stretched version of the J model with a 15-foot fuselage extension. The usable cargo compartment length of C-130J-30 is 55.5 ft. and usable height and width stays the same (71). With this cargo compartment features, the J-30 version is only approximately 14 ft shorter than C-141 aircraft.

The C-130 crew is usually composed of five with a minimum of at least four. Two pilots, a navigator, flight engineer and loadmaster comprise the common crew. For airdrop missions, one additional loadmaster is needed (72). Maximum cargo capacity of the C-130J is 46,631 lbf whereas that of the C-130J-30 is 46,812 lbf. Both models have approximately same maximum normal payload of 38,500 lbf. The C-130J and J-30 have a maximum gross take off weight of 155,000 lbf. With 38,000 lbf of payload and a cruising altitude of 20,000 feet, the C-130 has a range of approximately 2,100 nautical miles. The C-130 cruise speed is about 320 knots (Mach number ≈ 0.58) (70).

3.2.5. Summary of cargo bay sizes

A comparison of the four cargo aircraft bay size is presented in Figures 3.5 and Figure 3.6 and Table 3.3.

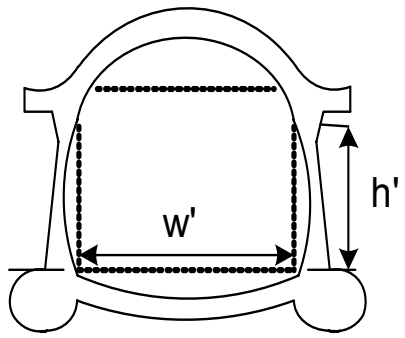

Figure 3.5. Usable cargo bay end view

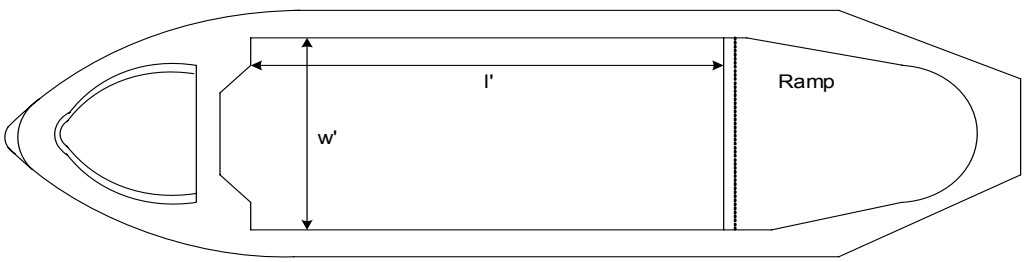

Figure 3.6. Cargo bay top view

Table 3.3 Cargo bay size (1, 3, 5)

	Max. Length (l) ft	Max. Width (w) ft	Max. Height (h) ft	Usable Length (l') ft	Usable Width (w') ft	Usable Height (h') ft
C-17	88	18	12.4	65.3	18	11.8
C-141	93.4	10.3	12.4	69.6	10.3	8.8
C-5	143	19	13.5	107.3	19	12.3
C-130J	53.8	10.3	11.6	40.4	10.3	9.1
C-130J-30	73.8	10.3	11.6	55.4	10.3	9.1

3.3. Physical Characteristics, Operations and Performance of Missiles

3.3.1 Joint Standoff Weapon (JSOW)

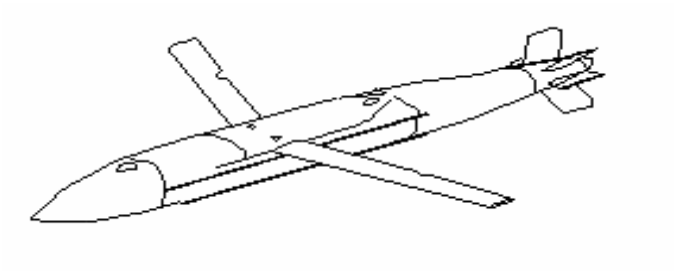

Figure 3.7 JSOW missile (8)

The Joint Standoff Weapon (JSOW) is an air-to-surface standoff weapon for use against a variety of targets depending on payload and warhead. It is 162 in long and has a box-shaped body 13 in on a side. It weighs between 1065 lbf and 1500 lbf depending upon the warhead, sensor and propulsion combination (7). As shown in Figure 3.7, the wings are initially folded and on the top of the missile and can be deployed in 1 1/2 seconds. Upon release the wings have a sweep angle of 25 degrees and a wingspan of 106 in. At the tail is a six-fin group with equally-spaced fins. Although unpowered for U.S. deployment, a JSOW was tested with the Williams WJ-24 jet engine in pursuit of a British requirement (8).

JSOW is a low-cost, air-to-surface, glide weapon that has a standoff capability between 15 to 40 miles depending on the launch altitude. The higher the launch, the longer the range. The JSOW can be used against a variety of land and sea targets and has three variants: AGM 154-A, B, and C. The AGM-154A warhead consists of 145 BLU-

97/B submunitions (22), and the weapon is mainly used against soft targets such as air defense radars, armor, artillery, and personnel. The AGM-154B was the anti-armor variant of the missile, but the Air Force abandoned the program and decided to use Wind Corrected Munitions Dispenser (WCMD) instead (21). After that move, the Navy also cancelled the program. The AGM-154C, the unitary variant of the missile, provides blast-fragmentation capability and is mainly used for point targets. JSOW can be launched from any heading relative to the target. With a tightly-integrated Global Positioning System (GPS) and Inertial Navigation System (INS), JSOW glides to the target area. JSOW obtains the targeting information in a fully pre-briefed mode or targeting updates received in the air through onboard systems or other assets like GPS satellites or data link. The AGM-154C uses its imaging infrared (IIR) terminal seeker and two-way data link for attacking with precision accuracy after arriving the target area (23). All JSOW variants are capable of day/night and adverse weather operations. Reported test results indicated that the AGM-154C has a 14 percent greater high-altitude range than the original objective as well as 11 percent greater accuracy (24).

AGM-154 A variant, baseline version, has completed engineering and development phases and is in production. It completed 42 of 45 scheduled test firings while demonstrating all key performance parameters, including Global Positioning Satellite-aided inertial guidance. Its standoff accuracy and lethality have been verified, and several JSOWs were used successfully in recent combat operations (37). The confirmed ability of the weapon's launch from high or low altitude and navigation to the target area ensures both aircrew survivability and assures a high kill probability. The Navy and Raytheon company are still working on the C variant of the missile. Its third

flight test was completed in June 2002 when it was launched from an F/A-18C flying at 29,000 feet at a Mach number of 0.90. It navigated to the target area autonomously, and found and destroyed the target as planned. The warhead tests were conducted in fall/winter 2002. JSOW is currently carried on the F/A-18, F-16, F-15E, B-2, B-52, and B-1 aircraft. It is a highly reliable and effective weapon system with proven capabilities (38). The unit cost of JSOW A variant is approximately $ 250,000, whereas the C variant is much more expensive $660,000 (22).

From open-source literature, JSOW has been used in many operations around the world, and no accidents have occurred that this study is aware of. JSOW uses Multi-Application Fuse Initiation System (MAFIS) that has a front and back fuse that ensures no early or onboard detonation. Dual safety timers and oscillators are used to arm the warhead (51). After release from aircraft, the fuses arm the missile warhead with a delay to guarantee safe separation from aircraft, and the warhead detonates upon impact or detonation based on a specific case (51).

3.3.2 Joint Ai- to- Surface Standoff Missile (JASSM)

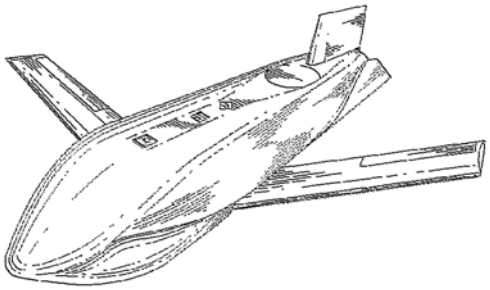

Figure 3.8 JASSM missile (9)

"JASSM is an all around weapon system stored in its own container" (9). The missile weighs 2250 lbf and is 168 in long with a diameter of approximately 18 in. It has a flat bottom initially folded wings mounted at the bottom of the missile, and a vertical tail fin. After launch, its wings deploy.

JASSM is a precision-guided advanced cruise missile designed to give the Air Force and Navy long-range standoff capability against a wide array of high-value, heavily-defended, and relocatable targets. It has a range of over 200 miles, and it will cruise automatically in all weather, day or night, with pinpoint accuracy (25). With JASSM, pilots will be able to launch the missile from well outside the range of enemy air defenses. A turbofan jet engine powers the missile to fly autonomously over a low-level, circuitous route to the area of a target area (26). JASSM uses its Anti-Jam Global Positioning System (AJGPS) guidance system coupled with INS enroute to travel into the

target area. In the terminal phase, JASSM uses its imaging infrared seeker and automatic target correlator algorithms to precisely locate the target aimpoint (27). It uses FMU156/B tail fuze for the JASSM warhead that detonates upon impact (28).

The JASSM program is still in development and it is not sufficiently mature to provide quantitative results. Since 2001, JASSM has undergone several flight tests. The first JASSM development flight test took place at White Sands Missile Range in New Mexico on 19 January 2001 (39). In recent tests, JASSM has proven to be a highly effective weapon. Currently, JASSM is in initial Operational Test and Evaluation (IOT&E) phase. On 13 September 2002, JASSM navigated through an intense, high-density jamming field to its planned target and destroyed it (40). Besides, JASSM has operationally obtained insensitive missile certification. With its fully-insensitive warhead, JASSM is unable to explode if exposed to fire or extreme temperatures. Moreover, it does not detonate if hit by a small-arm fire or explosion of another warhead nearby (52, 53).

JASSM can now be deployed from F-16 and B-52 aircraft, but it will also be integrated to the B-1, B-2, and F/A-18 in the future. The full rate production of JASSM is scheduled to begin in late 2003. The future unit cost of JASSM is $400,000 (26).

3.3.3 Standoff Land Attack Missile Expanded Response (SLAM-ER)

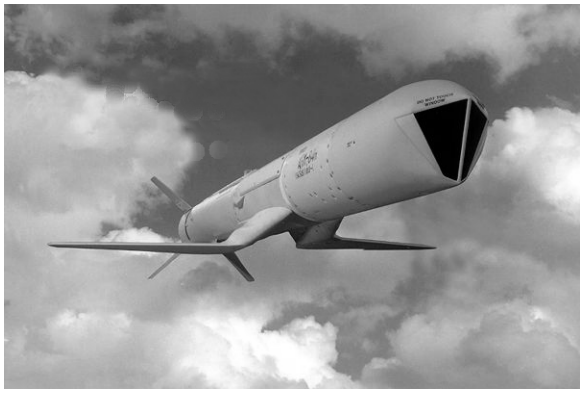

Figure 3.9. SLAM-ER missile (10)

SLAM-ER is a day/night, adverse-weather, precision-strike missile for the U.S. Navy. The missile weighs 1400 lbf and is 172 in long. It has a diameter of 13.5 in. Its wings are at the bottom of the missile, and the wingspan is approximately 86 in when the wings are deployed. At the tail is a four-fin group with equally spaced fins. The bottom of the missile is not round or flat, and the body mounted part of the wings makes the missile look like a plane (10).

SLAM-ER is designed for the Navy's requirements for a precision-guided, standoff, outside-of-area defense weapon. SLAM-ER can be used for both pre-planned or opportunity-type land or sea targets and is mainly intended to satisfy intermediate tactical needs between long-range cruise missiles and short-range, free-fall munitions (29). With a range of over 150 miles, SLAM-ER is designed to be launched away from enemy air defenses (31). Like some other missiles, its wings deploy and its small jet engine starts when launched. SLAM-ER's midcourse guidance is provided by GPS-aided INS, and the missile executes a flight plan up to seven waypoints or directly to the target

(32). It has the first operational Automatic Target Acquisition (ATA) on board. That enables SLAM-ER to match the seeker images of the target scene with an on-board reference image in the terminal phase. It also allows aimpoint cueing assistance to the pilot in man-in-the-loop (MITL) mode in cluttered scenes, bad weather, and countermeasures environments (31,32). In other words, pilots or persons in the loop can change the impact points of the missile against moving targets or ships. If not intervened, ATA is capable of providing automatic terminal guidance to the target. It uses FMU-155 fuses for the WDU-40/B warhead and is shaped specifically to increase penetration and becomes reactive during detonation, significantly increasing the blast and flammable effects (28).

In the 1999 DOT&E annual report, SLAM-ER was evaluated as operationally ineffective and unsuitable. After deficiencies were corrected in late 1999, the missile was appraised as effective and suitable. Moreover, a full-rate production decision was approved in May 2000 (41). The operational test phase was completed in September 2002, and a test team from the U.S. Navy's Air Test and Evaluation Squadron 9 graded the SLAM-ER Automatic Target Acquisition (ATA) operationally effective and suitable. SLAM-ER is currently operational from F-18 aircraft (42). The unit cost of SLAM-ER is $500,000 (29).

3.3.4 Low Cost Autonomous Attack System (LOCAAS)

Figure 3.10. LOCAAS missile (11)

LOCAAS is the smallest of the missiles described. It weighs approximately 100 lbf and is 30 in long. The wings are mounted at the top of the missile with a span of 40 in. There are two horizontal stabilizers and a vertical stabilizer mounted at the back pointing downward (11).

LOCAAS is a wide-area search submunition that is still in the development phase. LOCAAS can autonomously search for, identify, classify, and track targets like tanks, armored personnel carriers, trucks, and missile launchers for up to 30 minutes and cover approximately 100 nautical miles (33). It compares the three-dimensional images stored in its computer memory to the objects that the seeker scans. Through this pattern-matching judgment process, the computer can determine whether an object is a target or not (33). The LOCAAS deployment sequence includes ejection from a dispenser, inflation of a ballute parachute as a weapon retarder for speed reduction and flight

stabilization, and deployment of wings and engine for autonomous controlled glide to intended targets. It uses a solid-state LADAR (Laser Radar Tracking) sensor that also acts like a smart fuze. After it detects and identifies a target, the seeker and guidance system initiates the multimode warhead to detonate (33, 54).

Like the JASSM, the LOCAAS program is not sufficiently mature to provide quantitative results. In February 2002, LOCAAS demonstrated full air vehicle flying qualities and guidance performance in a test at Eglin Air Force Base, Florida. It was launched from an airplane flying at 1500 ft at 200 knots. After release from the aircraft, it checked through some waypoints and did maneuvers to prove its aerodynamic capability. It is designed to be launched from F-16, F-22, JSF, B-2, and B-1 aircraft. It can also be dispensed from a Multiple Launch Rocket System (MLRS) rocket or an Army Tactical Missile System (ATACMS) missile (43).

3.4. Function of Cargo Aircraft and Missiles

Cargo is usually carried on the pallets or if the volume is big, it can be floor-loaded to cargo compartment by lifters and fixed by using special tools in order not to move during flight. As described, cargo aircraft can usually carry various types of mixed cargo in normal operations. AFM 55-9 shows different types and mixtures of the cargo/troop cargo compartment allocation for the selected aircraft (44). CABS should be a system that can be easily installed in or removed from a cargo bay. In chapter four, the number of missiles that can fit in each cargo aircraft and some designs of container and launch will be examined. The containers that carry missiles will be placed near the ramp to be launched. If decided to carry mixed load, first the number of containers to be loaded

to the cargo bay have to be decided. If one wants to carry one container, the remaining place can be loaded with palletized or floor loaded cargo. Different types of missiles can be carried in a single sortie. But since the range of each missile is different from each other, that has to be taken into consideration. All of the missiles will use the same data bus for target information so, the placement of the missiles does not matter. But it may be more desirable that each carrier carry the same kind of weapon because of the simplicity of the mission.

The C-5 and C-17 aircraft can be loaded dual row because their cargo bay is wide enough. Cargo can be loaded side by side inside the cargo bay of a C-17 or a C-5, but only the C-17 has operational dual row air-drop capability. Neither the C-5 nor the C-141 can do dual airdrop. As mentioned before, C-5s have not been employed for airborne operations.

The cargo has to stay fixed in flight because of the center of gravity considerations except during air drop. During flight, the cargo is fixed to the walls or to the floor of the cargo bay with straps or other special equipment to prevent the cargo from moving inside the cargo bay. The center of gravity of the cargo is especially very critical in slow speeds, take-off/landing, or special operations.

From general literature knowledge, for the air-drop missions, the cargo is first strapped to the floor or walls. When the aircraft stabilizes for the air-drop, loadmasters unstrap the cargo and prepare for air-drop. In the air-drop zone, the ramp declines parallel to the horizon level and the cargo doors open. When released, the extraction chute first pulls the first piece of cargo out of the plane. If the pieces are connected each other, the one that is the most recent in the air either directly pulls the other piece or pulls

the extraction chute of the one in the cargo bay and so on. After each piece stabilizes in the air, the main cargo chute deploys and supports the cargo to the ground. Although JASSM can be launched any heading with respect to target, all the missiles are preferred to be launched so that the tail part of the missile will come out of the aircraft first, relative to the aircrafts flight path.

The air flow behind the open ramp has lots of vortices and needs to be examined further for missile launch. Computational aerodynamics of the C-130 for airdrop configurations with tailgate down was carried out in recent studies. The experimental and computational airflow characteristics of a C-130 with its ramp down were investigated by Johnson et al (68). The results illustrated the turbulent flow around a C-130 in various flight conditions. One of the reasons to initiate the study is to solve paratrooper\aircraft separation problem of paratrooper deployment from the cargo bay with the ramp. If the static line inside the cargo bay does not function properly, the paratrooper may be hang on the line and if the line does not cut immediately, the paratrooper may hit the underneath part of the C-130 tail because of the strong upward airflow near the tail. Because of those problems, paratrooper deployment is accomplished through the side-doors.

Water tunnel flow visualization, computational fluid dynamics (CFD), and particle image velocimetry (PIV) are three different techniques that are pursued to show and study the features of the circulation/separation section aft of a cargo bay ramp. All of the techniques show the two important features of the flow characteristic of the open ramp. First one is the powerful vortical areas immediately behind the ramp. The characterization of the air flow is shown in Figure 3.11.

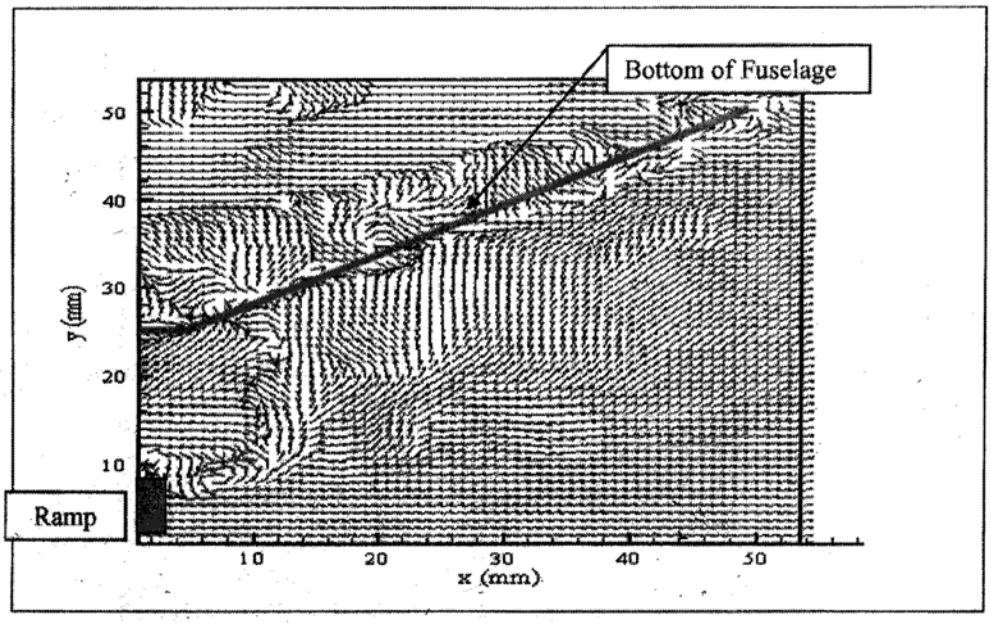

Figure 3.11. Qualitative representation of velocity vectors immediately aft of the ramp (68)

As can be seen from Figure 3.11, the strong vortical velocities start right after the ramp and are dissimilar. Some are vertical, some are horizontal and some are backwards causing a back pressure towards the cargo bay. There are two major vertical flow areas underneath of the fuselage. The first one starts after strong vortical velocities right after the ramp. The second one is the escalating upward flow area around half way between the ramp and the bottom of the fuselage under the tail. Figure 3.12. is another depiction to show the accelerated flow area midway beneath the fuselage. The light gray areas demonstrate relatively high vertical velocity magnitudes.

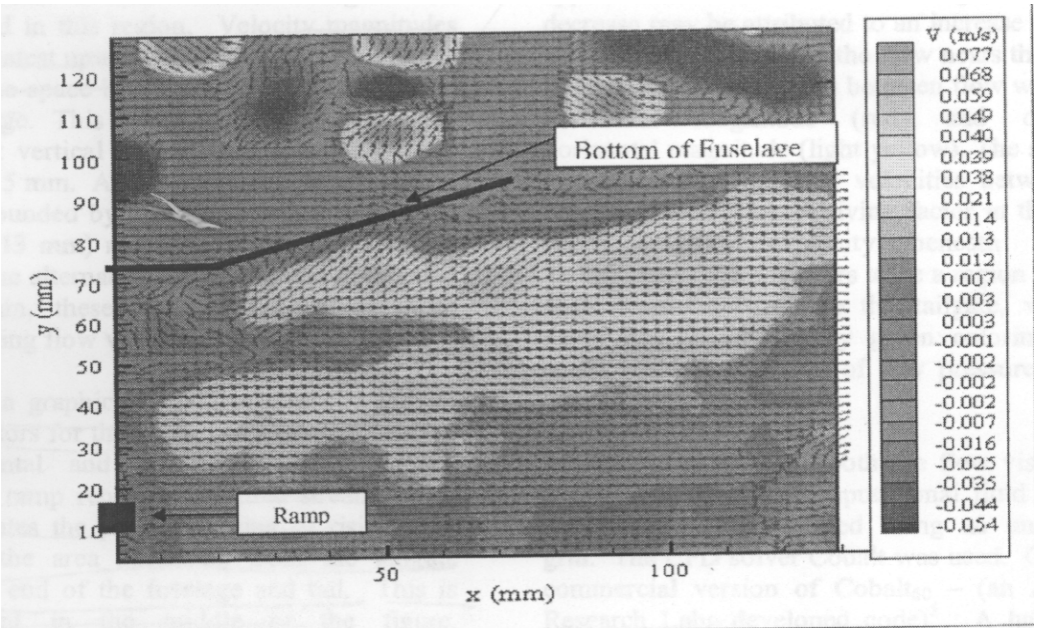

Figure 3.12. Vertical velocity magnitudes immediately aft of the tailgate (69)

To overcome those vortices, extension of the cargo ramp is proposed in the report. By doing so, longitudinal vortices tend to vanish and strong vertical flow dwindles.

Serrano *et al*. (69) used computational aerodynamics to simulate the airflow around the C-130 in airdrop configurations and extraction chute geometry. The 15-foot extraction parachute which is the standard air drop chute used in C-130 aircraft, was used in the simulation. One of the main purposes of the study was to examine where to mount the extraction chute to avoid high vertical vortices. Currently, the extraction chute can be inflated from 16 ft to 49 ft aft of the ramp. The study shows that, if the extraction chute is inflated in less than 30 ft, it will be caught in the area where vertical velocities will be high. Any inflation over 30 ft assures smooth air flow for the extraction chute.

3.5. Interface of Cargo Aircraft and Missiles

Typically in the past, aircraft and stores were developed independently of each other or were developed exclusively for each other. This usually resulted in unique aircraft/store electrical interconnection requirements and costly aircraft modifications to achieve store utilization flexibility. Today's precision guided missiles require increasing amounts of avionics data and control information from aircraft systems that leads to significant aircraft/store interfacing requirements.

To handle aircraft-missile interface requirements, MIL-STD-1760 was introduced to enable a wide variety of aircraft and stores to be compatible with each other. This standard uses a standard electrical (and fiber optic) interconnection system for aircraft and stores. This interconnection system is based on use of a standard connector, a standard signal set and a standard serial data interface for control, monitor, and release of stores (48).

Application of MIL-STD-1760 to new and existing aircraft and new stores will considerably reduce and stabilize the number and variety of signals required at aircraft/store interfaces and thus enhance store interoperability among the services. Currently, JSOW and JSSAM are using MIL-STD-1760 connector to transfer guidance information to weapons (45). SLAM-ER and LOCAAS are assumed to use the same bus. The target data can be loaded before deployment of the missiles and can be changed during flight and deployment. Presently, C-141, C-17, C-5 and C-130 aircraft have and use MIL-STD-1553 "Aircraft Internal Time-Division Command/Response Multiplex Data Bus"(46,47).

MIL-STD-1553 is the military standard that defines the electrical, mechanical and timing specifications for a communication network, which interconnects cooperating digital units in a system. This communication network, also referred to as a data bus, is typically used in avionics systems, but also used in submarines, tanks and missiles (49).

MIL-STD-1760 and MIL-STD-1553 busses usually work together in a fighter or bomber aircraft. MIL-STD-1553 is related with the avionics and related systems, whereas MIL-STD-1760 interconnects mainly avionics and weapon systems (50). So, in order to transfer guidance and firing information to weapons, MIL-STD-1760 plugs has to be installed in the carrying platforms. The connection plugs of the MIL-STD-1760 should be available at several locations in the cargo bay. After that, the missile carrier units can be connected to the bus by using connectors. There should be an individual connection for each missile. Missile target information or release data can be changed by using the two buses. The controls of the data may be done by the loadmasters or weapon system officers in the cargo aircraft. Related instruments may be placed in the loadmaster's main instrument panel in each aircraft for ease of use.

Another choice would be using wireless technology to transfer guidance and firing information to weapons. At that time, information and data separation for each missile would be important. For a large number of missiles on board, however, the separation and handling of the data for those missiles would be huge and very hard to manage through wireless signals (49). That possibility must be examined in detail before that choice could be used in the CABS.

A generic launcher functional diagram that shows the relationships between buses and the missile (rocket) are shown in the Figure 3.13. MIL-STD-1760 and MIL-

STD-1553 busses share the data from and to the aircraft. Fuze and fire signals are controlled by an electronic assembly. That assembly and Remove Before Flight Safety Switch also has connections with MIL-STD-1760 and MIL-STD-1553 buses. Release consent can be sent directly to the safety switch or via MIL-STD-1553. All of the systems and buses work together and have interconnections with each other. That system will be used in upgraded Navy/Marine Corps AH-1Z and UH-1Y helicopters (50).

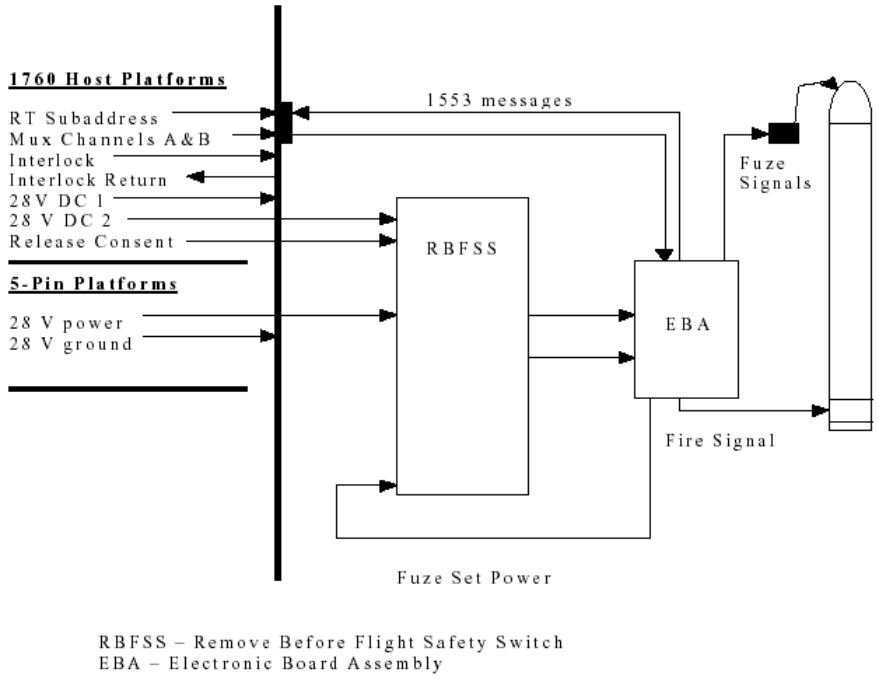

Figure 3.13 Typical connections of MIL-STD-1760, MIL-STD-1553 and other related systems (50)

3.6. Safety of Cargo Aircraft and Missiles

Both carrying platforms and missiles must meet the certain safety standards. C-141 and C-5 fleet have been flying around the globe for nearly three decades. Likewise, the C-130 has been one of the most versatile cargo aircraft in over forty years of service. Some accidents have happened during the time but overall, their safety record

is above standards (64). In order to be operational, each missile system has to meet many safety standards. Lots of warhead and detonation tests are being done to ensure their safety, before becoming fully operational.

In general, the cargo airplanes are designed to land with heavy cargo in case of an engine malfunction. In case of an aircraft emergency, these missiles on board can be released or jettisoned. That means if an emergency happens to the aircraft, the pilot can either release the missiles to a safe place like the sea or an uninhabited area or land with them.

At the beginning of the study, the intention was to explore the launch of general purpose (GP) and some laser guided bombs (LGB) from a cargo aircraft. The maximum range for general purpose and laser guided bombs is found to be 15 miles. That means, in order to drop the bombs the aircraft needs to be close to the target resulting in a high risk to the cargo aircraft. So deploying GP or LGB from cargo aircraft increases the threat to the carrying platform. When released from high altitude, unguided general purpose bombs make big errors. Laser guided bombs designed to minimize that errors but their technology is rather old and they are not as precise as standoff missiles. Moreover, the target should be illuminated by the laser signal until the LGB hits the target. Generally, the illumination is made by the launch aircraft, but it can be done from another aircraft or from the ground. Because of the accuracy and threat considerations, the study will not recommend the use of general purpose bombs or laser guided bombs in CABS.

3.7. Availability of Cargo Aircraft and Missiles

The airlifters presented in the study are prepared to conduct any level of operations around the world. The Transportation Command is responsible for strategic air, land, and sea transportation of all U.S. military services throughout the world. However, in the long run, more aircraft will be required for the Transportation Command. For example, C-17s have done 47 percent of all airlift missions into the Afghanistan Campaign, whereas C-5s have done the 29 percent. The remaining 24 percent has been carried by other airlifters in the inventory (61).

"Right now, the United States does not have enough airlift to meet the minimum requirements set in a recent study of the Defense Department's transportation system." noted Air Force Gen. John W. Handy, commander in chief of the U.S. Transportation Command and commander of the Air Mobility Command (AMC) (61). A study called "Mobility Requirements Study 2005 (MRS 05)" estimates that: "By 2005, The Armed Forces will need a minimum of 54.5 million ton miles in strategic airlift per day from active and reserve components of the Air Material Command and commercial airliners in the Civil Reserve Air Fleet. Today's capability is less than 46 million ton miles per day" (61). To fill the shortfall, AMC has requested more C-17s and modernized C-5s. The United States Congress approved the purchase of 60 C-17s and with that aircraft the total will add up to 180. But General Handy said "That will not be enough. We need at least 222 C-17s to meet the minimum requirements of the MRS-05."

With the shortfall of strategic transportation aircraft, bomb deployment from cargo aircraft brings more work onto the aircraft and crew as well as a requirement for more aircraft.

Currently, strategic transportation missions are mainly and mostly done with C-17 aircraft. Right now the availability of the aircraft is low because of its high workload. Presently, the availability of the C-5 s are low and the C-5 has the highest operating cost of any weapon system, and the trend is a rise in duty rates and reliability and maintainability costs for the C-5 s in past years. The availability of the C-141 is also low. On the other hand, the C-130 remains a critical element of the Air Force's tactical airlift fleet. The Air Force maintains a primary mission aircraft inventory of approximately 700 C-130s for tactical airlift (73). Some analysis and studies showed that, there were more C-130s in inventory than necessary for military operations. About 50 C-130 aircraft were acknowledged in the Air Force as excess over requirements. Thirty of these were in the Air National Guard and Air Force Reserve units and the remaining were in the active duty force (73). In 1996, the Air Force wanted to reduce numbers of the C-130 fleet, but according to the officials the reductions were not made as of 1998. Air Force officials reported in 1998 that the Air Force was in the process of designing a plan for retiring excess C-130s and buying additional C-130J and extended C-130J-30 versions (73). That program is still in progress and it was reported that replacement of old C-130E versions will be completed by the end of 2003. No further information was found about the availability of C-130 fleet. From general literature knowledge, the workload of C-130 fleet appeared to be very intense. But because of availability, the study considers the use of C-130 aircraft high for a bombing role.

Overall, the availability of the strategic carriage platforms is low whereas, C-130 fleet availability appears to be high right now. Several factors limit the availability of the aircraft like structural damage caused by aging, avionic limitations, and workload of the

systems. The employment of the bombs from cargo aircraft will raise the workload of the current aircraft and maybe make it impossible to use cargo aircraft in bombing role.

Currently, JSOW is widely used by U.S. Air Force and the U.S. Navy. The Navy purchased approximately 16,600 JSOWs A variant and has pulled its funding for the antiarmor version of JSOW (21). The Air Force has approximately 6000 of JSOW A variant. To date, from the literature gained by multiple sources, it appears that more than 100 weapons have been employed in operation Southern Watch, NATO Operation Allied Force and Operation Enduring Freedom. So the availability of JSOW missiles is high.

JASSM is the lowest priced and most effective conventional cruise missile ever built for the Air Force and Navy and it will be operational in late 2003 (63). The Air Force will buy 3700 missiles. The Navy did not decide about the amount (62). The tests of JASSM are ongoing and so far they are successful. The integration of the missile to the B-52, B-2, and F-16 is complete and each of the aircraft deployed successful JASSM's. Presently, the availability is low but after becoming fully operational, the availability and usage should be high.

SLAM-ER is the Navy's precision-guided missile and it is operational right now. Boeing is currently under contract with the U.S. Navy to produce 376 SLAM-ERs, with production expected to continue beyond 2004 (42). The inventory objective is currently approximately 700 SLAM-ERs. It can be said that availability is high with that missile.

LOCAAS is envisioned as a miniature, autonomous powered munition capable of broad area search, identification, and destruction of a range of mobile ground targets. The flight tests are still on process and LOCAAS demonstrated full air vehicle flying qualities and guidance performance in February 2002 at Eglin Air Force Base in

Florida.(43). LOCAAS program has been designated Miniature Munition Capability program and the availability of that missile is low right now.

Generally, the availability of the missile systems is high. JSOW and SLAM-ER missiles are operational now and have high availability. JASSM will be available in two or three years. LOCAAS program is just at the beginning so there is no available data.

Training and personnel issues also have to be considered in this study. Cargo aircraft crew is familiar with cargo carriage and drop. Launching missiles from cargo aircraft is somewhat new to most crews; therefore special training about CABS and missiles will be needed. Two loadmasters work in C-5, C-130 and C-141, whereas only one loadmaster services C-17 aircraft. Current loadmasters may be trained for special CABS operations, or different personnel may be selected and trained as weapon system officers to be used in CABS. Currently, the C-130 aircraft crew is trained at Combat Aerial Delivery School (CADS) at Little Rock AFB. CADS is focused on developing and maintaining combat readiness and ability of C-130 pilots and loadmasters (67). The training of the CABS personnel may be done in that center for selected aircraft. Technical data and specifications about missiles and CABS and special operations missions may be taught and initial operation tests may be done in that center.

3.8. Scenarios

Generally, when planning an air campaign to attack and destroy the targets, enemy air defense assets are evaluated very thoroughly. Typically, one of the first things the strike package might encounter is the enemy's air defense fighter planes. A cargo plane that carries precision-guided missiles is very vulnerable against fighter planes. But

it is believed that, since such a cargo plane would be assessed as a highly-valuable air asset, the protection of the aircraft would be very strong.

Currently, the attacks are usually done by strike packages. That strike packages are generally composed of bombers and fighters that have different roles like Suppression of Enemy Air Defenses (SEAD) aircraft, combat air patrol (CAP) aircraft, electronic warfare aircraft and close air support (CAS) aircraft. The strike package is commonly supported by NATO airborne early warning (NAEW), airborne battlefield command, control and communications (ABCCC), electronic intelligence/ surveillance (ELINT/ESM) and air-to-air refueling (AAR) aircraft. The bombers and the planes that are susceptible to enemy fire are protected by the other fighter aircraft and special assets. The enemy's surface to air missiles (SAM) are most likely suppressed by HARM missiles. In this study, enemy air defense fighter planes are not considered a threat to the cargo plane that carries CABS. Before the cargo aircraft enter the theater, most probably the area would be swept by friendly fighter aircraft. Any threat would be eliminated before the strike package enters the target area. If one considers the value of a cargo plane that carries 50 missiles, it would be apparent that it should be protected very intensely. As indicated above, the enemy fighters are not big issue since any cargo airplanes with CABS would likely be protected very vigorously, but SAM coverage of the enemy should be studied comprehensively. Any missing SAM would be very deadly to the cargo airplane because of its low maneuverability and lack of countermeasures to escape from a flying SAM. As it is explained earlier, some C-141, C-130 and C-17 carry chaff-flare dispensers and missile-warning sensors but those devices are likely inadequate for an airborne SAMs. Without enough maneuverability and strong countermeasure

system, it is very hard to escape from sophisticated air defense missiles and at that point, a cargo airplane is very defenseless. Some SAM systems considered in scenarios and their specifications are tabulated in Appendix A.

At this point of the study, ground air defense systems evaluated in three groups. These are; low, medium and high threat environments.

3.8.1. Low Threat Environment

The low threat environment is considered as small arms and automatic weapons plus light and heavy optically/radar aimed anti-aircraft machine guns up to 23 mm. or equivalent weaponry. The maximum slant range of these kinds of weapons is considered 9000 ft and radar aimed anti-aircraft artillery can be defeated by electronic countermeasures (ECM).

In such an environment, every missile and aircraft combination described in this study can be used. JSOW with a range of 15 miles can be employed in low-threat environments. Since it is desired to launch JSOWs as high as possible to enhance accuracy and range, the danger of being vulnerable to anti-aircraft artillery is reasonably small for a cargo aircraft. The desired launch altitude might be between 15,000 and 20,000 ft for the JSOW launch. Since other missiles have higher range, they can be launched in low threat environments.

3.8.2. Medium Threat Environment

The medium threat environment includes low threat weapons, and optically/radar aimed anti artillery weapon heavier than 23 mm; man-portable, shoulder-fired surface to

air missiles; and some SAMs that have limited capability, altitude and range. These kinds of weapons include HAWK, ASTHER 15, SA-2, SA-6, SA-8, SA-11 and their variants. Although these missiles are generally old, nevertheless they are used as defense systems in many countries. The maximum range of these types of missiles is 30 miles, but they generally engage within the 15-20 miles range (20). They are effective against targets up to maximum 40,000 ft, but above 25,000 ft their maneuverability decreases significantly (20).

In such a threat environment, JASSM, SLAM-ER, LOCAAS can be used from any of the selected aircraft and can be launched at any altitude since minimum range for these is 100 miles. SLAM-ER and JASSM can be launched 100+ miles to the target area. For LOCAAS the range is approximately 60-80 miles at any altitude. Again, the medium-high altitudes are preferable for launch. JSOW can be use limited. If decided to use in medium threat environment, JSOWs must launch before a 25 mile ring to the target area and that means a high-altitude launch preferably over 20,000 feet. In this case, using C-5 as a launch platform is risky because of its size and currently unpowerful engines. Likewise, C-130 has turboprop engines that limit the aircraft climbing to high altitudes with a heavy payload. If launching JSOW, from a C-17 or C-141 is considered as the best choice.

3.8.3. High Threat Environment

The high-threat environment includes low and medium threat weapons and sophisticated long-range SAM systems. Without appropriate defensive countermeasures, tactics and force protection, penetration to enemy air defense involves a high probability

of detection and probability of kill. Most of the systems are very sophisticated ground air defense systems like PATRIOT or Medium Extended Air Defense System (MEADS) of United States; ASTHER 30 of European Union; SA-10, SA-12 or SA-20 of former Russian Republic; or variants of these missiles produced by other countries (20). The minimum effective range of these kinds of missile defense systems is around 40 miles (20). They usually engage the targets between 40 and 80 mile ranges up to 100,000 feet (20). The most wide-spread sophisticated Russian SAM system is the SA-10 (S-300) that has a range between 100 and 130 miles (20). Their tactical engagement is usually between 60-75 miles but improved versions of that missile can engage up to 100 miles (20). The SA-20, an upgraded version of SA-10, has range greater than 100 miles (20). Lots of technical and financial problems occurred with this program so it is unclear if this system is operational or not (20). This study assumes its inoperability.

In such an environment, only JASSM and SLAM-ER can be used from any of the carriage platforms. The missiles should be launched before the 100 miles ring. LOCAAS can be used if no SA-10 or SA-20 battery or equivalent is reported. Even in that case the missiles should be launched as far out as possible. JSOW usage for high-threat environment is not recommended. Since launched from 100 miles, each of the carriage platforms is suitable. The suitable launch altitude for the JASSM and SLAM-ER might be around 20,000 ft.

4. Design Phase

This chapter presents an approach for the design process of a Cargo Aircraft Bombing System (CABS). Each step, including unfeasible ones, is presented. LOCAAS is regarded as a miniature type of munition and its volume and mass are not comparable with the other missiles presented in previous chapter. Moreover, LOCAAS is still in its early development phase and not yet operational so it is not evaluated in the design phase. The design of CABS for the miniature weapons like LOCAAS has to be done separately.

First step determines the maximum number of missiles that can be carried in each platform? The volume of each missile and aircraft is tabulated in Table 4.1. The longest missile is SLAM-ER (170 in long). The maximum diameter of the missiles considered is 18 in. To obtain a maximum number it is assumed that every missile can fit in an imaginary box measured 20x20x200 in^3. Based solely on volume for example, a C-17 could carry approximately 450 JSOWs, whereas a C-5 could carry over 700 JSOW missiles. According to the volume, the maximum number of missile carriage for several aircraft and missiles is charted in Table 4.2. Based on weight, however, the maximum number of missiles that an aircraft could carry is much less.

Table 4.1. Cargo bay and missile volumes

Usable Cargo Volume	C-17	C-141	C-5	C-130J	C-130-J30
	587.12 m^3	322.71 m^3	985.79 m^3	128.9 m^3	170.5 m^3
	20,914 cu ft	11,399 cu ft	34,795 cu ft	4,551 cu ft	6,022 cu ft

Volume	JSOW	JASSM	SLAM-ER
	1.28 m^3	1.31 m^3	1.39 m^3

Table 4.2 Maximum number of missile carriage according to volume

	C-17	C-141	C-5	C-130J	C-130-J30
JSOW	459	252	770	100	135
SLAM-ER	448	246	753	97	130
JASSM	422	232	709	90	120

The maximum number that each carriage platform can carry according to mass is shown in Table 4.3. From the referenced literature, each aircraft has an operational carriage limit that is approximately 75% of the maximum carriage limit. The operational boundary for maximum carriage is shown in Table 4.4. It is assumed that a C-17 will carry 130,000 lbf of bomb load at an initial altitude of 28,000 ft (13). These limits are 71,500 lbf at 25,000 ft for C-141, 202,500 lbf at 27,000 ft for a C-5, and 38,500 lbf at 20,000 ft for every model of C-130 (6, 5, 72).

Table 4.3 Maximum number of missile carriage according to mass

	C-17	C-141	C-5	C-130
JSOW	131	73	208	35
JASSM	76	42	120	20
SLAM-ER	122	68	193	33

Table 4.4 Operational maximum carriage according to mass

	C-17	C-141	C-5	C-130
JSOW	100	55	155	29
JASSM	60	32	90	17
SLAM-ER	93	51	144	27

Table 4.4 shows the maximum number of missiles each cargo aircraft can carry based on the allowable maximum operational carriage for each aircraft in a single sortie. Table 4.5 gives current fighter and bomber carriage capabilities for comparison with the numbers shown in Table 4.4.

Table 4.5 Fighter and bomber aircraft maximum missile carriage capabilities (74-78)

	B-1	B-2	B-52	F-16	F-18
JSOW	12	16	18	2	2
JASSM	24	16	12	2	NA
SLAM-ER	NA	NA	NA	NA	2

Normally, fighter aircraft can carry a maximum of two standoff missiles in a single sortie. The B-1 and B-2 carry the missiles inside their bomb bays (77-78). The B-1 has three and B-2 has two bomb bays (77-78) from which standoff type missiles are carried and launched by rotary launchers. A rotary launcher can carry four JSOWs and eight JASSMs (66). If fewer missiles are to be launched, the combination of less rotary launchers and missiles are configured. For example, if it is decided to carry four JSOWs on a B-1, two rotary launchers with two JSOWs or four JSOWs on one rotary launcher are loaded. B-52 aircraft carry standoff type of weapons externally on missile launchers under their wings (76).

As indicated in Table 4.4, large numbers of missiles can be carried in cargo aircraft based on operational mass restrictions. Normally a full load would not be carried in each sortie with CABS. Based on missile and aircraft availability, and a given mission, a particular number of missiles could be carried. The problem now is how to place and carry these missiles on board. In second step, for carriage and release, three types of CABS are proposed.

1. Tray/Spring type carrier/launcher.
2. Rotary type carrier/launcher.
3. Tray/Chute Extraction type carrier/launcher.

4.1. Tray/Spring Type Carrier Launcher

It is assumed in this study that the missiles can fit in an imaginary box measured 20x20x200 in. It is further assumed that the missiles are carried and launched from a box-shaped carrier/launcher side by side and stacked in trays one above each other like in an oven. In the design process of the study, it is intended to design a scalable container for the missiles that fits every aircraft. To do this, first, the smallest cargo bay dimensions (C-130 and C-141) have been considered and a design was proposed that can also be scaled to the C-17 and C-5.

A sample design for the C-17 is given as an illustration assuming that there is a restriction of cargo movement during flight.

The proposed sample CABS container for the C-17 is a box with a length of 200 in, a width of 130 in and a height of 140 in. The dimensions are sized to fit the missiles as well as to fit inside the ramp, which is 18 ft wide and approximately 20 ft long. It has five tray places located one above the other. The trays have grooves that the missiles rest on, so each missile will slide on them at launch time. Five JSOWs or SLAM-ERs, or four JASSMs can be carried in and launched from a tray. The trays have the same dimensions as the carrier. For this container, twenty-five JSOW/SLAM-ER or twenty JASSMs can be carried as shown in Figure 4.1. The container size can be adjusted as needed to fit the various aircraft.

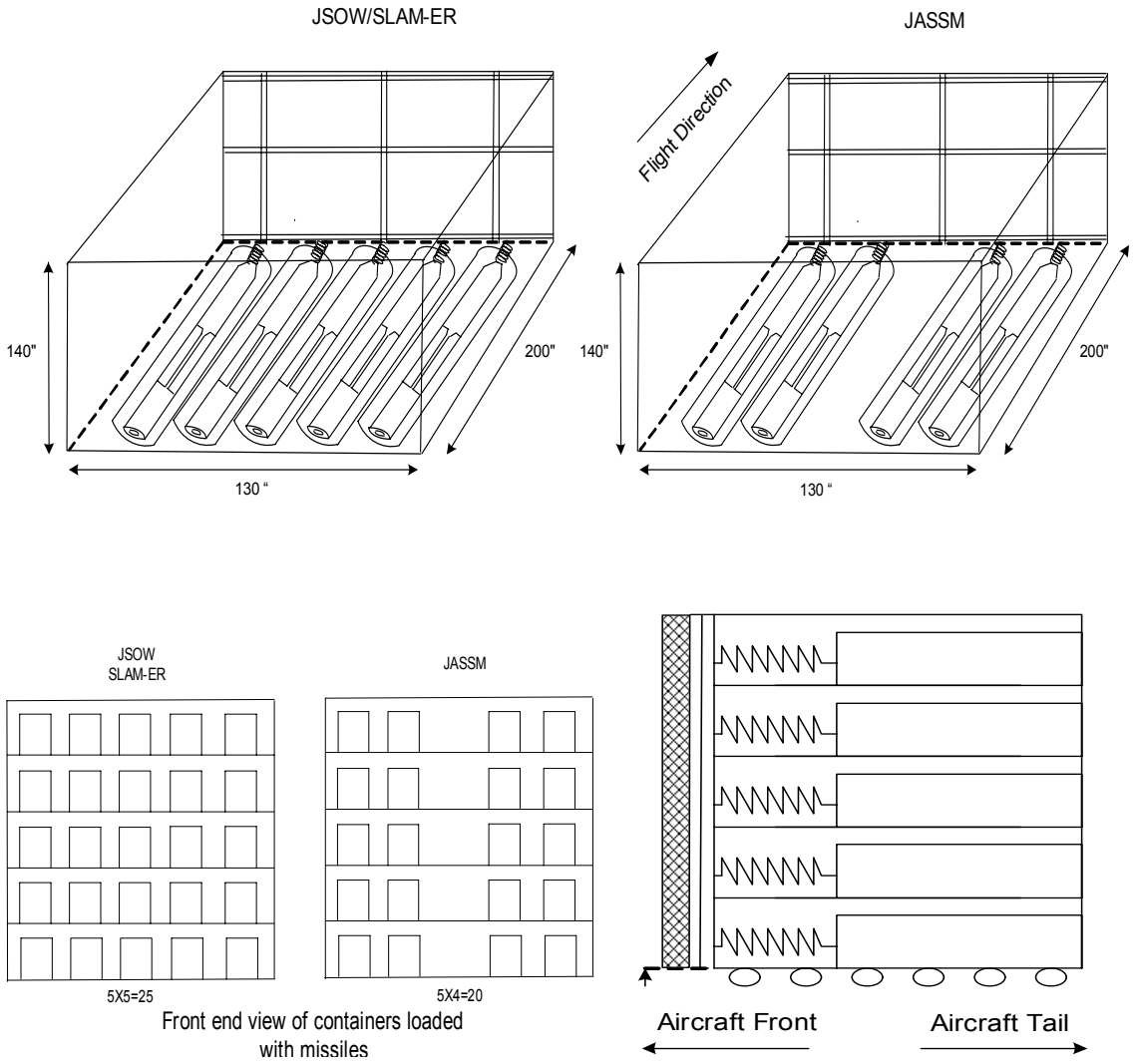

Figure 4.1 C-17 sample CABS container and tray mechanism

A fully-loaded container weighs 32,500 lbf with JSOWs, 35,000 lbf with SLAM-ERs and 45,000 lbf with JASSMs. The carriage capability of the ramp is 29,000 lbf and can be lowered down 10 degrees during flight under 230 knots (1). So, if one container with a given number of missiles weighs less than 29,000 pounds, the container can be put on the ramp, and can be lowered down to have the advantage of the gravity. In

order to do this, the weight of trays and missiles must be less than maximum ramp weight. Also, the container must be attached to the ramp or to the cargo bay side doors by a special apparatus that will hold the container and allow missile launches and then retract the container (partly or completely empty) or allow the empty container to be released.

The sample CABS cargo bay layout for the C-17 is presented in Figure 4.2. While a maximum number of 75 JSOW/SLAM-ER or 60 JASSMs can be carried and launched using three containers inside the cargo bay, normally fewer missiles would be carried for launching. For that case, the trays can be rearranged to fit the given number of missiles. If decided to launch a single JASSM for example, one container and one tray with one JASSM on it could be put into the cargo bay compartment.

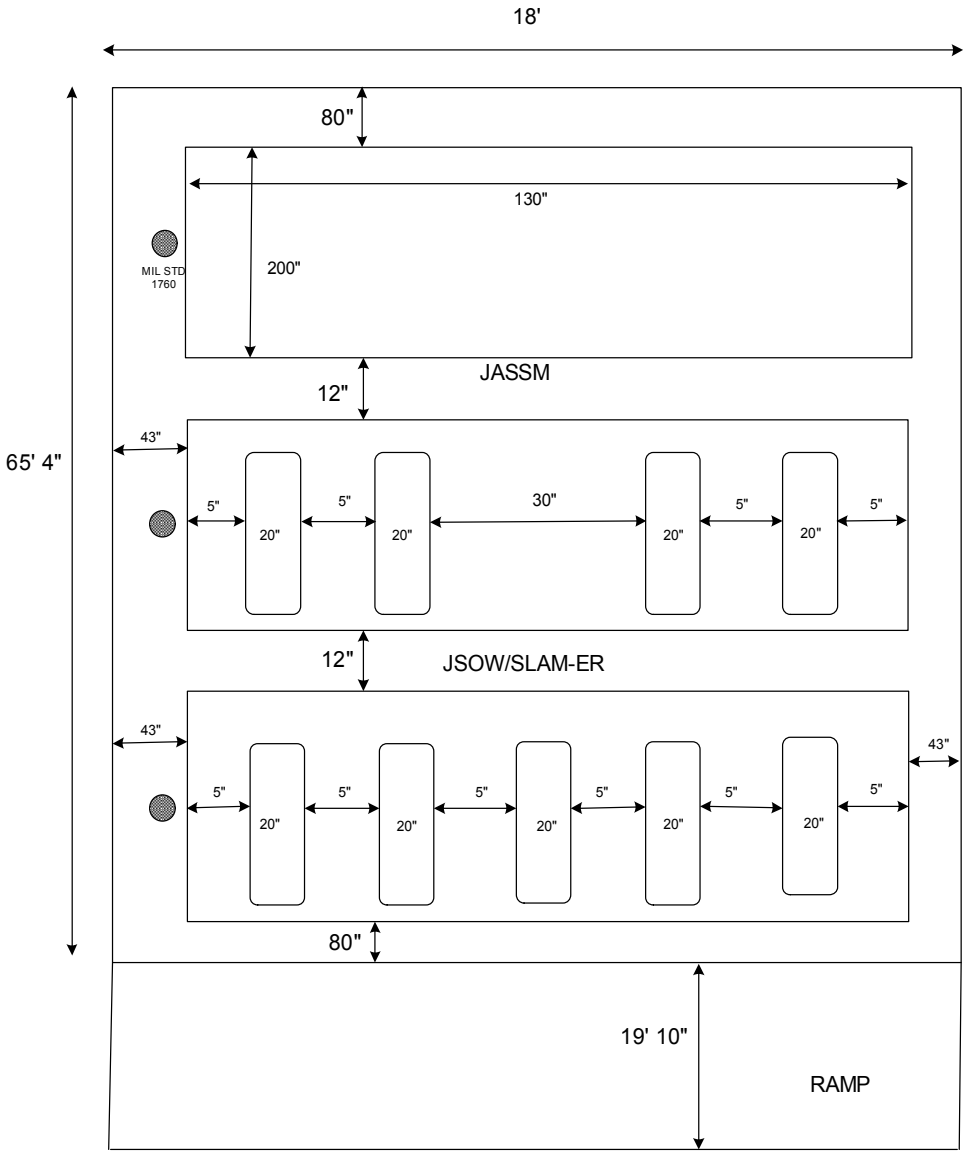

Figure 4.2 C-17 sample CABS cargo bay layout (Not to scale)

Typical release sequence will begin with the tilting up of the aft cargo door. Then the ramp will be lowered down until it is horizontal to the flight path of the aircraft. Later, the first container will move to the edge of the ramp and will be held by straps and special apparatus so as not to move. The missiles are placed in the trays pointing in the same direction with respect to the aircraft's flight path so that when the missiles are

launched out the rear of the aircraft, they will be oriented in their actual flight direction. A spring mechanism that launches the missile and a safety mechanism that holds the missile on the groove are located at each end of the missile. To launch missiles, a spring-device is anticipated and explained in detail later. The missiles are positioned on a groove on the tray that helps them to slide off the container. For safety reasons, missiles are also kept locked by an electric guided pin located at the end of the groove at the tray. Upon the release command, pin located at the tail of the missile is lowered to let the missile slide off the system with the help of the spring mechanism located at the other end of the tray. The release signal is transmitted through a MIL-STD-1760 data bus, which enables all the connections to be unlocked like the ones that keep the missile on the tray and spring system that pushes the missile out of the aircraft. Previously, the study has introduced MIL-STD-1760 to relay the data to the missiles. To fit the design, three MIL-STD-1760 plugs have to be installed to the floor of the cargo bay. For example, the plugs can be installed on the left side of the each container, expendable ones are preferred. Each missile needs data flow from two data buses from a single plug (MIL-STD-1760 and MIL-STD-1553). CABS container will be connected to the ground plug, and then each missile will be connected to the container separately just like in a fighter or a bomber aircraft. In a fighter aircraft each missile is mounted to the racks, and then the plug that carries two data bus information is connectrd to the missile (73). From the information gained from the literature, MIL-STD-1760 carries the launch signal to the rack and missile, which unlocks together the connectors that hold the missile on the rack and connection plug (73). That launch signal will start the missile for operation after a small time delay. The operation of the container will be similar. For multiple launches,

the release sequence of the missiles on the trays can be bottom to up and left to right. If multiple containers are carried on board and first container is empty, there must be a way to cycle to the other containers for launch. To do that, either the first container will be jettisoned during flight or another device will be used to carry the trays of remaining containers to the first. Jettisoning the first container out of the aircraft appears to be impractical so an electrical/hydraulic driven mechanism is proposed to transfer the trays from last two containers to the first one. The electric/hydraulic driven device will allow the movement of the trays to an adjacent container. To help the easy movement of the trays, the distance between each container should be small (A 12 in spacing between the containers is proposed).

The force required of spring mechanism is based on a friction coefficient that is considered to vary between 0.5 and 1 (the mid and maximum range at metal on metal) and based on these coefficients the minimum force required for each missile is calculated. The calculations are presented in Appendix B. The forces required are tabulated and shown in Table 4-6.

Table 4.6. Minimum force required for launching the missiles

	Min Force Req.(N)	
	f = 0.50	f = 1.00
JSOW	2892	5785
JASSM	5006	10012
SLAM-ER	3115	6230

In order to determine spring system feasibility, Spring-Pro Win Version 4.0 software was used. The longest of the missiles is 172 in (SLAM-ER). So the maximum free length for spring usage is assumed 25 inches. The spring material used is high carbon spring wire. The forces and spring specifications are tabulated in Table 4.7.

Table 4.7. Spring specifications

	Min Force Req.(lbf)			
	750	**1,500**	**2,250**	**3,000**
Material Used	Hard Drawn MB A277			
Wire Diameter (in)	0.8	0.9	0.9	1
Outside Diameter (in)	4.2	4.5	4.5	5
Inside Diameter (in)	2.6	2.7	2.7	3
Free Length (in)	25			
Total Coils	15	14	16	18

From Table 4.6 and Table 4.7, it can be concluded that spring ejection is feasible. For spring material, high carbon spring wire (Hard Drawn MB A227) is used but the spring works under high stress conditions and low life is expected. By using alloy steel wires (chrome vanadium or chrome silicon) that weakness can be solved.

The combination of missiles can be done in the container since the trays used to carry and launch are same. To avoid missile to missile collision, the study recommends launching missiles one by one. The generic engine start of missiles occurs in less than a second, so missiles may be launched at intervals of seconds but operation of missile should begin after the missile completely clears the aircraft.

The C-5 aircraft can use the same type of containers and mechanism described in previous chapters. A C-5 can carry five containers inside its cargo bay, that means maximum number of 125 JSOW/SLAM-ERs or 100 JASSMs can be carried and launched. Since five containers on board, five MIL-STD-1760 connectors have to be installed to the cargo bay. Carriage and launch procedures and sequence will be same as described in previous paragraphs.

The usable width and height of C-130 and C-141 is almost the same. C-141 is approximately 30 ft longer than C-130J and 15 ft longer than C-130J-30 model so, the container should be scaled narrower and shallower to fit these aircraft. Scaled container can carry maximum four trays one above other and trays are also should fit the container. Each tray can carry maximum four JSOW/SLAM-ERs or three JASSMs. Three containers can fit into both of the aircraft. But in order not to exceed the weight limits, the C-141 can carry maximum three containers whereas the C-130 can carry two. The maximum number of missiles that can be carried with spring type container is given in Table 4.8.

Table 4.8. Tray/Spring type carrier maximum missile carriage

	C-17	C-5	C-141	C-130
JSOW	75	125	48	28
JASSM	60	100	36	18
SLAM-ER	75	125	48	28

As discussed above, the maximum numbers are shown only to determine the maximum carriage capacity. The purpose of the study is to show the feasibility of missile launch from cargo aircraft, not necessarily carry and launch full missile load.

Overall, tray/spring type of launcher appears feasible in the study. One disadvantage may appear in the hydraulic/electrical system used to transfer the missiles since that type of add-on will increase the cost and mass of the system. The transfer of the missiles required to the launch position if all missiles of first CABS is launched. The spring mechanism usually works under a high stress condition, the springs should be well maintained. Two of the recent studies explained in previous chapter show us if spring

mechanism is used, the vortices aft of the ramp will influence the missiles and the spring would require more force to exert the missiles due to back pressure. Moreover, the missiles may tumble around because of the vertical velocities explained previously. Also because of the dissimilar vortices right after the ramp and back pressure towards the cargo bay, lowering the ramp with missiles on it emerges impractical and not recommended. Further study of aerodynamic effects on cargo bay launched missiles has to be done. Simulation of missile launches from different cargo aircraft should be made to see and study the real aerodynamic effects.

The full missile load cost of tray/spring type of launcher is given in Table 4.9 below. If one considers carrying full load of JASSM for example, only missile costs is 42 million dollars. The cost of modifications to aircraft, and the container cost should also be considered in further studies.

Table 4.9 Missile cost of full carriage

COST	C-17	C-141	C-5	C-130
JSOW A	$ 18,750,000	$ 12,000,000	$ 31,250,000	$ 7,000,000
JSOW C	$ 49,500,000	$ 31,680,000	$ 82,500,000	$ 18,480,000
JASSM	$ 24,000,000	$ 10,800,000	$ 40,000,000	$ 7,200,000
SLAM-ER	$ 37,500,000	$ 24,000,000	$ 62,500,000	$ 14,000,000

4.2. Rotary Type Carrier Launcher

Another carriage and release system that could be used is a rotary type carrier and launcher. The use of this system is inspired by the Multi-Purpose Rotary Launcher (MPRL) that is currently used by B-1 and B-2 aircraft (66). Basically, the system used in cargo aircraft composed of three parts. First part is the rotary part that bombs are mounted on. The second part is the carriage system that enables rotary part to be carried in the aircraft. The third part is the release part that can be extracted or retracted through the cargo bay.

The rotary part is the most important part of the system. Eight missiles can be mounted on the rotary part. Figure 4.3 depicts the frontal and side view of the rotary part.

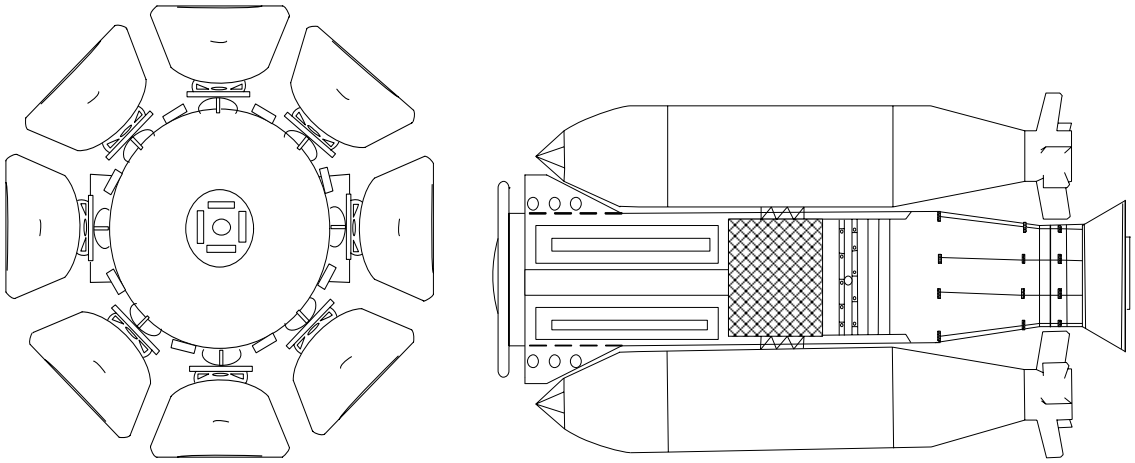

Figure 4.3. Frontal and side view of rotary part (66)

The missiles are mounted on a rotary shaft that turns around itself and can release one missile at a time. That rotary part is also surrounded by electrical and data wires or the parts that helps for missile release. The rotary part is loaded on the ground one by one, and is expected to require about two hours for loading eight missiles. After loading

and wire connected, the rotary part is put in a container that looks like a semi-cylindrical shape that protects the missiles and parts. That container and rotary part is shown in Figure 4.4.

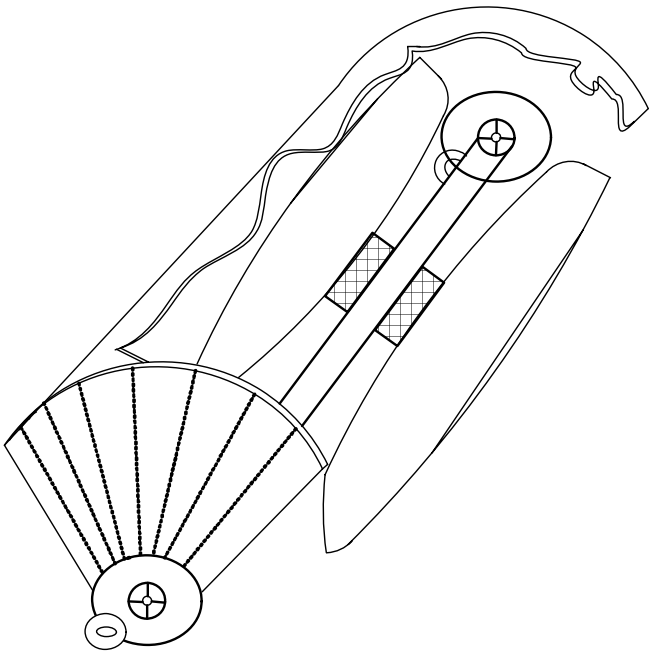

Figure 4.4. Rotary part

To use that rotary delivery system, a carriage system has to be installed inside the cargo bay. A railed system on the top of the cargo bay is suggested. That system is mounted to the ceiling of the cargo bay that can lift the rotary modules and carry it to the release system to the end of the ramp. Electric power can be used to run the railed part.

As stated, a separate release system has to be built inside the cargo bay. That system is composed of rods and can extract the rotary part out of the open cargo bay of aircraft. After release of the missiles, that system retracts the rotary module back into the carrier. The release system would be about 150 inches long and 100 inches wide. It will be positioned and carried right after the missiles. When the release time comes, the ramp

will be lowered until the flight path and the release system will be positioned to the open ramp. Carriage system will pick the module that is closest to the back of the aircraft and transfer the module to the launch system, which in turn will retract the module out of the open ramp. The missiles will be released one by one by as the rotary launcher operates. After the launch of the missiles, the carriage system will take the empty module and place it to its original location. This sequence will repeat as desired or until the desired number of missiles are launched. The carriage and release systems are shown in Figure 4.5.

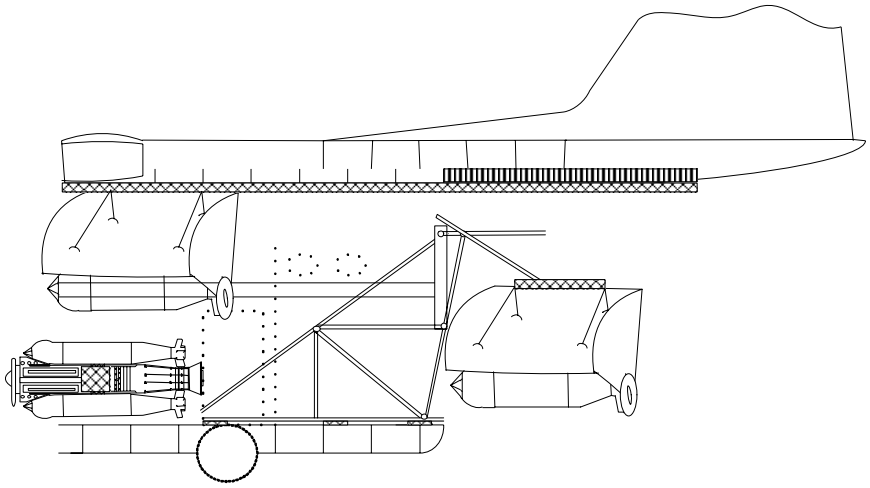

Figure 4.5 Carriage and release systems

A sample cargo bay layout for the C-17 is described in which the C-17 could carry up to a maximum of six of the rotary launchers on board. That means 48 JSOW, JASSM or SLAM-ERs could be carried and launched by using rotary launcher. Again, the normal carriage would be less than maximum, since it is not necessary to carry and launch a full missile load. Depending on the number of missiles, the modules can be reconfigured with to the desired missile load. The MIL-STD-1760 connectors should be

installed and connected to each of the rotary parts. A sample of C-17 rotary launcher CABS layout is shown in Figure 4.6.

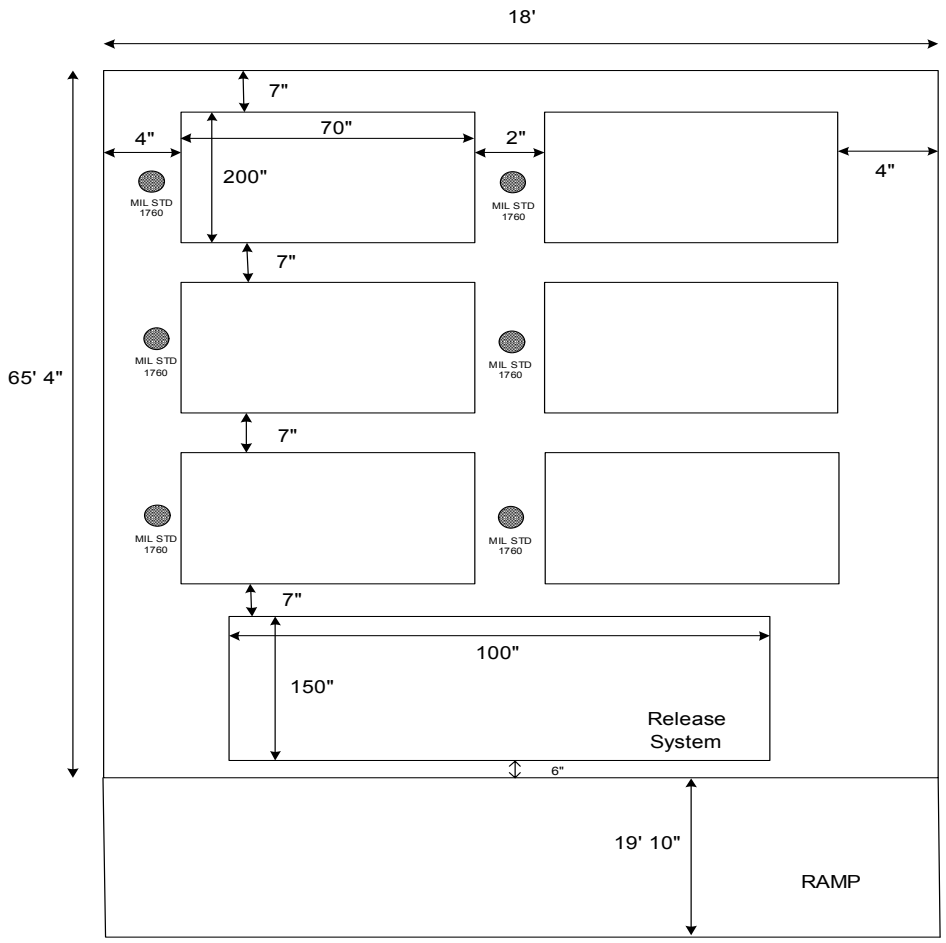

Figure 4.6 Sample C-17 cargo layout for rotary launcher

Likewise a C-5 can carry ten, a C-141 can carry three, and a C-130 can carry two of the rotary launchers on board.

On the whole, rotary type launcher is not particularly advantageous to use in cargo aircraft for the following reasons. First, there are a lot of modifications needed to

be done to the carrying platform. Additionally, when extracted from cargo bay of the aircraft, the air flow around the ramp and the bottom of the fuselage under the tail can cause negative aerodynamic forces and cause the launcher hit underneath the tail part of the aircraft. Moreover, the complex launch systems and sequence will take too long while transferring and launching the carriage system inside the cargo bay.

4.3. Tray/Parachute Extraction Type Carrier Launcher

The last proposed launcher type is parachute extraction type carrier/launcher. The carriage system is the same as presented in the spring type of launcher but the shape and function of the trays are different.

A chute extraction system uses same box type container that spring type uses. The release sequence is similar except one uses spring to force the missiles out of the aircraft; the other uses parachute. Parachutes that are 15 ft in diameter can create up to 25,000 lbf. force when extracted (69,95). Any parachute inflation in less than 30 ft behind the aircraft will allow the chute to be caught in high-vertical-velocity area. Inflation beyond 30 ft aft of the ramp should assure smooth extraction for a C-130 aircraft (69).

With a parachute extraction system, the missiles can be launched one by one or with the tray.

4.3.1. One Missile per Launch

If decided to launch the missiles one by one, the same trays can be used, but the spring mechanism at the front end of the missiles has been removed at this time. The parachute extraction system will be mounted at the back of the missile. When the launch time comes, the first launcher needs to be positioned to the edge of the ramp. The small leading parachute controlled by MIL-STD-1760 system gets the launch signal and pops out. That helps the extraction parachute to move out of the plane. The force of the extraction chute pulls the missile out of the aircraft. After the stabilization of the missile in the air, the chute releases and the missile operates as planned as shown in Figure 4.7. Multiple launches may be done but to avoid missile and missile collisions, the study suggest launching of missiles one by one.

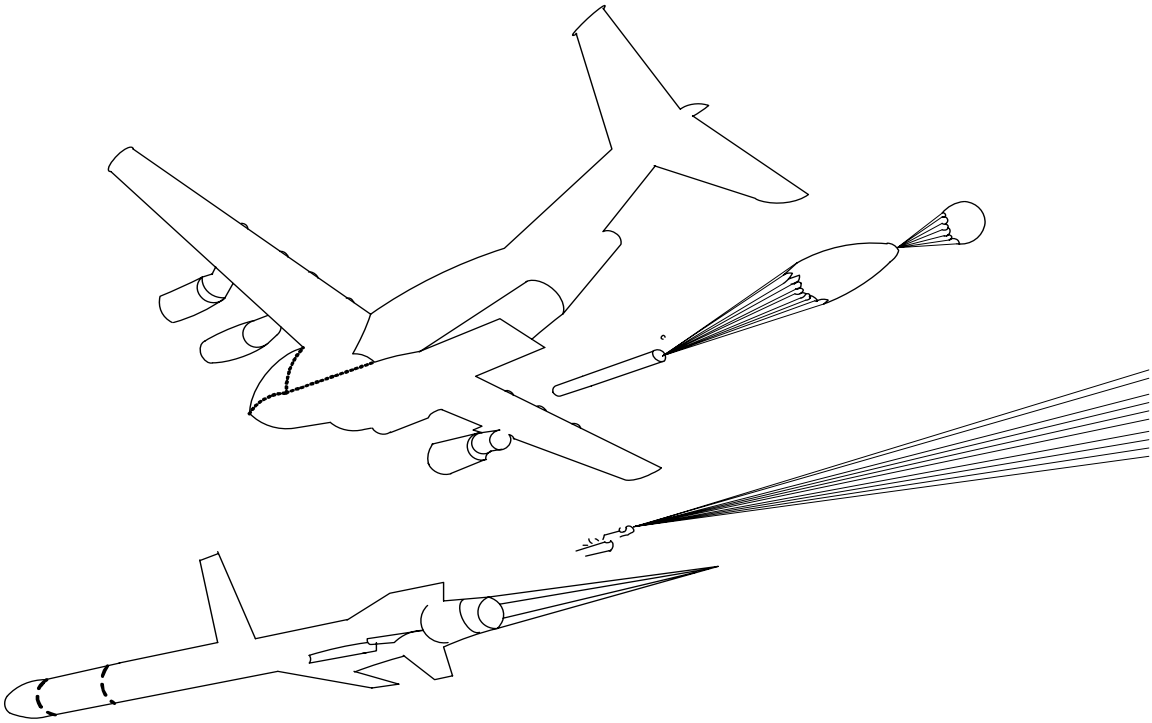

Figure 4.7. One missile per launch

4.3.2. One Tray per Launch

Another approach may be forcing out one tray at a launch. For multiple targets for example, the whole tray can be launched. But the design of the trays is different to launch the missiles. In this case, the missiles are mounted beneath each tray and they are fastened by two clips at the each end of the missiles. For launch, the first launcher needs to be moved to the edge of the ramp. The leading and main parachute is mounted at the back of each tray and controlled by the MIL-STD-1760 system. When the launch signal is taken by the leading chute, it opens and it moves the extraction parachute out of the aircraft. The force of the extraction chute takes the tray out of the airplane. After the launch, the tray swings in and stabilize (95), the clamps that hold the missiles release in a sequence to avoid missile to missile collisions. After clearing off the tray, missiles operate as planned. The sequence is depicted in Figure 4.8.

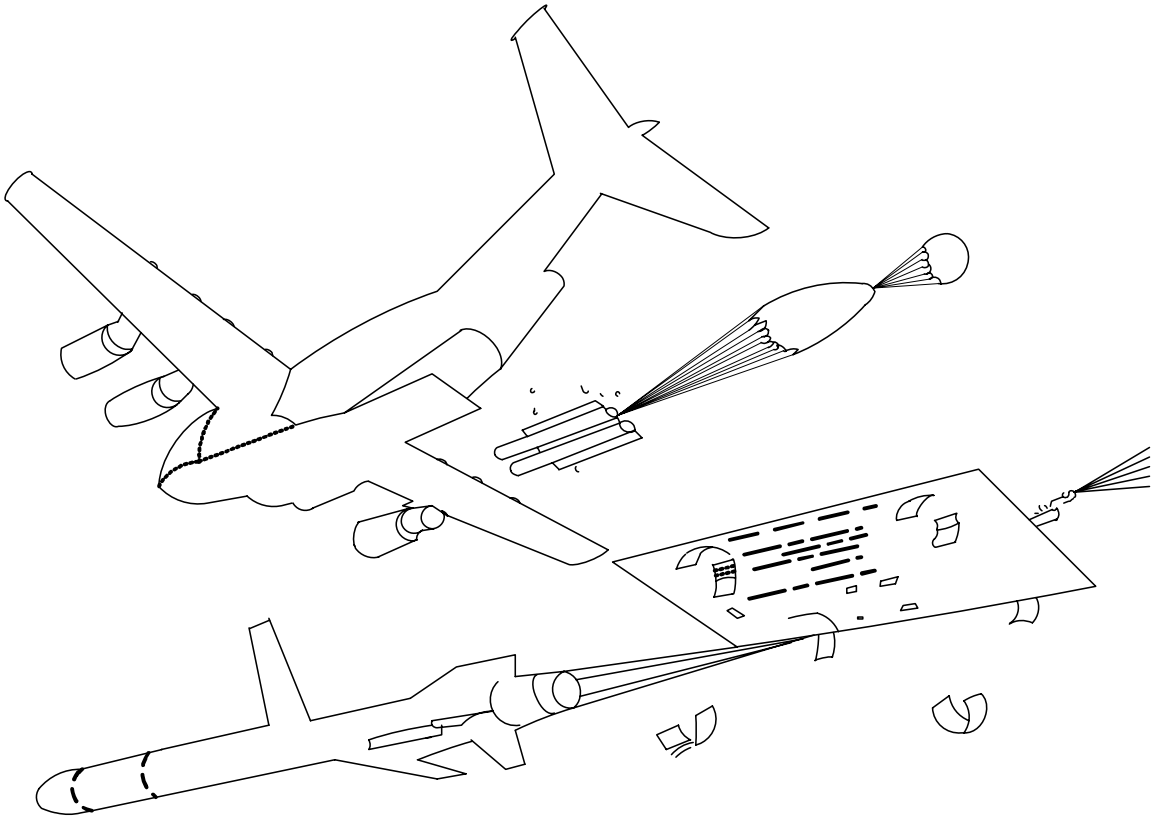

Figure 4.8 One tray per launch

Using parachute extraction system appears the most usable way of delivery in the study. Same tray type is also used in spring type of system that helps standardization. One of the most important considerations of the study is the aircraft/missile separation and the aerodynamic effects. The air flow behind a C-130 has been studied recently. The ramp usage in airdrop of every aircraft is the same. The way cargo door opens is the same except that of C-141 and C-5. So the air flow characteristics of C-141 and C-5 may be different. In addition, Johnson et al (68) explained that based on the cargo bay volume and the dimensions of the cargo bay, the magnitude of vortices right aft of the ramp changes but characteristics believed to stay the same. By using an extraction chute inflated over 30 ft. aft of the ramp believed to ensure the flawless separation of missiles

from the aircraft for a C-130 (69). But aerodynamic flow characteristics of different type of aircraft (C-17, C-5 and C-141) have to be studied further. Some CFD studies or wind tunnel experiments are needed for characterization and classification of airflow behind different types of aircraft. Additionally, simulation missile launches from cargo aircraft should be made to work on the real aerodynamic effects.

5. Summary, Conclusions, and Recommendations

5.1. Summary

This study has discussed many aspects of a Cargo Aircraft Bombing System (CABS) and provided an overall view. The intention of the study was not to complete design details about CABS, but rather to identify preliminary design concepts that need to be considered in a CABS. It is believed that, in order to construct and operate the most effective and reliable system, one should establish the need for the system and identify related facts and specific requirements for operation of the system. There are also constraints that affect the system and how can they be overcame. This study has considered these areas and provided an overall review. A main topic was to assess if a CABS is really wanted to be used in the air war. The main purpose of the study is to state as many issues as possible related with a CABS.

The study considered and provided background information on four carrying platforms including the C-17, C-141, C-130 and C-5, and four types of precision guided missiles including JSOW, JASSM, SLAM-ER and LOCAAS. Based on the four platforms and four missiles, particular issues were considered concerning systems.

The background, problem, objective, and scope of the study have been stated in the first chapter. The current and proposed air war with CABS has also been discussed. The methodology of the study, systems design approach, has been introduced.

Chapter two provided a literature review of air launched weapons and systems. The current available information about deploying missiles from cargo aircraft has been

described. The Commando vault (Daisy Cutter) and the British Future Offensive Air System (FOAS) has introduced.

In the definition and concept phase of the study, the physical characteristics of each aircraft and missile were described; including the cargo aircraft compartment specifications. The way the Air Force uses each missile and aircraft platform, and their performance parameters have been examined and evaluated for input to this study. The functional aspects of cargo air drop have been considered and extended to missile deployment. One of the main concerns of the study is the aerodynamic effects that the missiles will encounter during launch from the cargo bay. Some facts about air flow characteristics around C-130 aircraft have been presented. The interface requirements have been articulated as well as safety issues. Moreover, the requirements and current availability of aircraft and missiles are given. Finally, some scenarios are presented and based on that scenarios, which aircraft/missile combination can be used have been assessed in chapter three.

A preliminary design of CABS related to carriage and release, and some alternative release designs have been proposed in chapter four. As mentioned before, the purpose of the study is to elucidate as many issues as possible considered important in a given period of time to construct an effective cargo aircraft bombing system. The bolts and nuts of the CABS have not been demonstrated. In order to construct a usable and combat ready CABS, much more work has to be done. A team effort is envisioned where experts in various elements of design, development, manufacture, and operational personnel are involved.

5.2. Conclusions

As the feasibility of air launch concept has been proven in Daisy Cutter and Alt Air programme, a Cargo Aircraft Bombing System (CABS) is feasible under some conditions:

- The strategic airlifters like C-17 and C-5 may be used in CABS. Since stated by the mobility requirements study 2005, the shortfall of strategic transportation is evident. The mission capable rates of C-17 and C-5 are at the limit and fully mission capable rates of each aircraft are below desired limits. Moreover, the C-141 fleet is being retired and the C-5 has not been employed for airborne operations at the present time. Only C-130 aircraft seem to be available for the consideration for a CABS.
- Of the four missiles considered, JASSM and SLAM-ER, as compared with JSOW and LOCAAS, appear the most useful missiles to be used in a CABS because of reduced threat considerations compared with their long range. In real world scenarios, medium and high threat scenarios are expected and usage of unguided bombs and missiles with short range like JSOW is shown to be of high risk. Preference should be for long range missiles in CABS described in this study.
- The most available aircraft appears to be C-130 in the study. When maximum carriage capability of C-130 is compared with bombers in the inventory, no significant advantage is apparent but it is not necessary to carry full missile load on board. Likewise, if decided to carry comparable amount of missiles with the bombers on a C-17, C-5, or C-141, using bombers instead of cargo aircraft appears advantageous. Using cargo aircraft is profitable in case no bombers are

available for a mission or high numbers of standoff missiles are to be carried in cargo aircraft. The combination of JASSM or SLAM-ER missiles with C-17 or C-5 maximum carriage appears valuable although mounting as many as 100 missiles on one airframe may involve high risk and may not be feasible due to limited availability of the missiles.

- A tray/chute extraction type carrier/launcher was shown to be the most feasible design in the study. Since the aerodynamic features at the aft of the open ramp were recently attained in a study of the C-130 aircraft, the justifiable solutions to parachute usage for missile launch has shown for C-130 aircraft. The cargo bay door openings of C-5 and C-141 are different and C-17 tail design is different than that of C-130. Thus, additional flow studies like wind tunnel experiments or CFD of different type of aircraft have to be done to demonstrate legitimate usage of chute extraction for missiles.
- The rotary type carrier/launcher is not attractive because too many modifications to the carrying platform are required to launch the missiles. Additionally, the launcher part of the system has to be positioned beyond the end of the open ramp which appears impractical.
- Tray/Spring type carrier/launcher was considered feasible in the study. Although the spring mechanism that forces the missiles out of the aircraft works under high stress and the missiles may expose different aerodynamic flows, it can be physically possible to launch missiles by using proposed system. Nonetheless, more comprehensive study of the system has to be done to utilize the actual spring system.

5.3. Recommendations

This study has attempted to demonstrate many related areas about missile launch of a cargo aircraft. Considering time and the breadth of the study, it is apparent that much more work has to be done if it is decided to use CABS operationally. After the conclusions stated above, some other discussions and suggestions for future studies can be summarized as follows:

- The further studies related to CABS should be done by systems engineering design teams relevant to different disciplines.
- Wind tunnel and CFD studies should be done for each of the aircraft presented in the study.
- The extended ramp solution for C-130 must be reevaluated for CABS to overcome longitudinal vortices and strong vertical flow for C-130.
- Simulation missile or dummy missile launches from cargo aircraft should be done to carry on the work on the real aerodynamic effects.
- C-141 fleet is explained to be retired in three years. Two or three Special Operations Low Level -Version II (SOLLII) equipped C-141s can be modified as CABS carriers. Likewise, some special operations C-130s can also be modified CABS carriers.
- The possible launch concept of Air Launched Cruise Missile (ALCM) from cargo aircraft can be considered in further studies.

Appendix A. Some Surface to Air Missile (SAM) System Specifications

Source: (20)

	MAX.RANGE	MAX.ALT	EFFECTIVE RANGE
HAWK	15 NM.	30,000 FT	8-10 NM
PATRIOT	46-100 NM.	100,000FT	60-70 NM
ASTER 15	20 NM.	40,000FT	10-14 NM
ASTER 30	50 NM.	100,000FT	30-35 NM
SA-2	30 NM	30,000FT	15-20NM
SA-5	100 NM.	100,000FT	40-50 NM
SA-6	16 NM.	36,000FT	10-13 NM
SA-8	12 NM.	30,000FT	6-10 NM
SA-10	100-130 NM.	100,000FT	60-75 NM
SA-11	16 NM.	36,000FT	10-13 NM
SA-12	60 NM.	75,000FT	30-45 NM
SA-20	60-250 NM	100,000FT	80-140 NM

Table A.1 U.S, European Union, and former Soviet Union SAM systems.

Appendix B. Spring System Calculations

Source: (94)

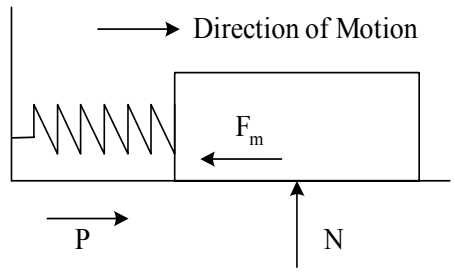

$$P = F_m$$

$$F_m = f * N$$

where $N = m * g$

$$g = 9.81 \text{ m/s}^2$$

The friction coefficient f is assumed and taken as 0.5 and 1.0 and based on the formulas above Table B.1 and Table B.2 are tabulated.

Table B.1 Minimum force required (N)

	Min Force Req.(N)	
	f = 0.50	f = 1.00
JSOW	2892.332	5784.664
JASSM	5005.96	10011.92
SLAM-ER	3114.819	6229.637

Table B.2 Minimum force required (lbf)

	Min Force Req.(lbf)	
	f = 0.50	f = 1.00
JSOW	650.2221	1300.444
JASSM	1125.385	2250.769
SLAM-ER	700.2392	1400.478

Bibliography

1. Jane's All the World's Aircraft 2001-2002
2. Department of the Air Force. *C-17 Globemaster Manual*. TO1C-17A-1. Washington: HQ USAF, 1 June 2000.
3. Jane's All the World's Aircraft 1982-1983
4. Miller, Mark. C. Captain, USAF C-17 Pilot, Dayton Air Show 2002. Personal Interview. 20 July 2002.
5. Jane's All the World's Aircraft 1983-1984
6. Best Aviation Sites Web page. "Lockheed C-5 Galaxy."n.pag. http://www.zap16.com/mil%20fact/C-5%20galaxy.htm. 19 September 2002.
7. U.S. Navy Fact File. "AGM-154 Joint Standoff Weapon." n.pag. http://www.chinfo.navy.mil/navpalib/factfile/missiles/wep-jsow.html. 19 September 2002.
8. USNI Military Database. "AGM-154 JSOW(Joint Standoff Weapon)." n.pag. http://www.periscope1.com/demo/weapons/missrock/landatk/w0004368.html. 19 September 2002.
9. Federation of American Scientists Web Page. "JASSM Launch & Leave Subsonic Cruise Missile Design." n.pag. http://www.fas.org/man/dod-101/sys/smart/docs/990000-jassm.htm. 19 September 2002.
10. U.S. Navy Fact File. "SLAM ER Missile Systems." n.pag. http://www.chinfo.navy.mil/navpalib/factfile/missiles/wep-slam.html. 19 September 2002.
11. Federation of American Scientists Web Page. "Low Cost Autonomous Attack System (LOCAAS)Miniature Munition Capability." n.pag. http://www.fas.org/man/dod-101/sys/smart/locaas.htm. 19 September 2002.
12. NASA Fact Sheet. "NASA Contributions to the C-17 Globemaster III." n.pag. http://oea.larc.nasa.gov/PAIS/C-17.html. 18 September 2002.
13. Federation of American Scientists Web Page. "C-17 Globemaster III." n.pag. http://www.fas.org/man/dod-101/sys/ac/c-17.htm. 18 September 2002.
14. U.S. Air Force Fact Sheet. "C-17 Globemaster III." n.pag. http://www.af.mil/news/factsheets/C_17_Globemaster_III.html. 18 September 2002.
15. Federation of American Scientists Web Page. "C-141B Starlifter." n.pag. http://www.fas.org/man/dod-101/sys/ac/c-141.htm. 18 September 2002.
16. Special Operations Web Page. "SOLL II C-141 Starlifter." n.pag. http://www.specialoperations.com/USAF/SOLLII/C141/. 18 September 2002.
17. Federation of American Scientists Web Page. "C-5A/B Galaxy." n.pag. http://www.fas.org/man/dod-101/sys/ac/c-5.htm. 18 September 2002.
18. U.S. Air Force Fact Sheet. "C-5 Galaxy" n.pag. http://www.af.mil/news/factsheets/C_5_Galaxy.html. 18 September 2002.
19. Aerotech News and Review Web Page. "Lockheed Martin awarded contract for C-5 RERP preliminary work." n.pag. http://www.aerotechnews.com/starc/2000/022500/Lockheed_C5.html. 18 September 2002.

20. Federation of American Scientists Web Page. “Rest of World Missile Systems.” n.pag. http://www.fas.org/man/dod-101/sys/missile/row/index.html. 21 January 2003.
21. Wall, Robert. “Navy Joins JSOW Exodus,” Aviation Week and Space Technology, 144:32 (June 17, 2002).
22. Federation of American Scientists Web Page. “AGM-154A Joint Standoff Weapon [JSOW].” n.pag. http://www.fas.org/man/dod-101/sys/smart/agm-154.htm. 19 September 2002.
23. Raytheon Company Web Page. “Joint Standoff Weapon “JSOW … a combat proven revolution in strike warfare.” n.pag. http://www.raytheon.com/products/jsow/. 19 September 2002.
24. U.S. Navy Fact File. “AGM-154 Joint Standoff Weapon.” n.pag. http://www.chinfo.navy.mil/navpalib/factfile/missiles/wep-jsow.html. 19 September 2002.
25. Lockheed Martin Missiles and Fire Control Web Page. “Joint Air-to-Surface Standoff Joint Air-to-Surface Standoff Missile.” n.pag. http://www.missilesandfirecontrol.com/our_news/factsheets/factsheet-JASSM.pdf. 19 September 2002.
26. Federation of American Scientists Web Page. “AGM-158 Joint Air to Surface Standoff Missile (JASSM).” n.pag. http://www.fas.org/man/dod-101/sys/smart/jassm.htm. 19 September 2002.
27. Lockheed Martin Missiles and Fire Control News Release. “JASSM'S Flight Test Demonstrates Unique Missile Capabilities.” n.pag. http://www.missilesandfirecontrol.com/our_news/pressreleases/01pressrelease/021401_Jassm.htm. 19 September 2002.
28. Ordnance Technologies [UK] Limited Web page. “Missile Fuzing : FMU-156/B.” n.pag. http://www.ordnancetechnologies.com/index.html?fmu156.html&3. 19 September 2002.
29. U.S. Navy Fact File. “SLAM-ER Missile Systems.” n.pag. http://www.chinfo.navy.mil/navpalib/factfile/missiles/wep-slam.html. 19 September 2002.
30. Harris Corporation Web Page. “Boeing Awards Harris $2.7 Million Contract For SLAM-ER Missile Data Link Production.” n.pag. http://www.harris.com/view_pressrelease.asp?act=lookup&pr_id=643. 19 September 2002.
31. HARPOON/SLAM/SLAM-ER Web Page. “SLAM-ER” n.pag. https://tercel.mugu.navy.mil/harpoon/. 19 September 2002.
32. Boeing Web Page. “Standoff Land Attack Missile-Expanded Response” n.pag. http://www.boeing.com/defense-space/missiles/slam/slamer_back.htm. 19 September 2002.
33. Federation of American Scientists Web Page. “Low Cost Autonomous Attack System (LOCAAS) Miniature Munition Capability. n.pag. http://www.fas.org/man/dod-101/sys/smart/locaas.htm. 19 September 2002.
34. Director of Operational Test and Evaluation Web Page. “Welcome to the FY2001 Annual Report for the Office of the Director,Operational Test & Evaluation”

n.pag. http://www.globalsecurity.org/military/library/budget/fy2001/dot-e/index.html. 10 September 2002.
35. Air Force Link. "Directorates team up to reduce C-5 PDM flow days." n.pag. http://www.af.mil/news/Aug2001/n20010824_1177.shtml. 10 September 2002.
36. Aerotech News and Review Web Page. "Lockheed Martin selects General Electric as engine supplier for C-5 RERP." n.pag. http://www.aerotechnews.com/starc/2000/080800/GE_C5.html. 10 September 2002.
37. Raytheon Corporation Web Page. "Joint Standoff Weapon "JSOW … a combat proven revolution in strike warfare."" n.pag. http://www.raytheon.com/products/jsow/. 9 September 2002.
38. Pacific Ranges and Facilities Web Page. "JSOW Unitary warhead completes demonstration." n.pag. http://www.nawcwpns.navy.mil/~pacrange/s1/news/2002/JSOW01.htm. 9 September 2002.
39. Lockheed Martin Missiles and Fire Control Web Page. "Lockheed Martin's JASSM demonstrates unique missile capabilities." n.pag http://www.missilesandfirecontrol.com/our_news/pressreleases/02pressrelease/072202_JASSM.htm. 9 September 2002.
40. Lockheed Martin Missiles and Fire Control Web Page. "News Release." n.pag. http://www.jassm.com/news.html. 9 September 2002.
41. U.S. Navy Fact File. "SLAM ER Missile Systems." n.pag. http://www.chinfo.navy.mil/navpalib/factfile/missiles/wep-slam.html. 9 September 2002.
42. Boeing Web Page. "Boeing SLAM ER Completes Test Phase." n.pag. http://www.boeing.com/news/releases/1998/news_release_980625n.htm. 10 September 2002.
43. Lockheed Martin Missiles and Fire Control Web Page. "Lockheed Martin's LOCAAS successful in flight test." n.pag. http://www.missilesandfirecontrol.com/our_news/pressreleases/02pressrelease/020602_LOCAAS.htm. 10 September 2002.
44. Headquarters Department of the Army. "FM 55-9 Unit Air Movement Planning." n.pag. http://www.globalsecurity.org/military/library/policy/army/fm/55-9/toc.htm. 16 September 2002.
45. Federation of American Scientists Web Page. "Mil-Std 1760." n.pag. http://www.fas.org/man/dod-101/sys/ac/equip/mil-std-1760.htm. 16 September 2002.
46. Global Defence Web Page. "New strategic aircraft mobility beyond the millennium." n.pag. http://www.global-defence.com/99/1998/AirSystems/newstrat.htm. 16 September 2002.
47. Support Systems Associates Web Page. "Ruggedized Data Acquisition System." n.pag. http://www.ssaiinc.com/rdas.pdf. 16 September 2002.
48. Air Force Technologies Web Page. "L-3 Communications Corp./Electrodynamics,Inc. Flight Data Recorders, Memory Units and Solid-State Data Storage." n.pag. http://www.airforce-technology.com/contractors/electronic/l3_communications/. 16 September 2002.

49. Naval Air Warfare Center Weapons Division Web Page. "MIL-STD-1553 & 1773 Data Bus." http://ewhdbks.mugu.navy.mil/1553-bus.htm. 16 September 2002.
50. Defense Technical Information Center Web Page. "MIL-STD-1760 Digital Launcher for Navy/ Marine Corp 2.75-Inch Rocket Sytem." n.pag. http://www.dtic.mil/ndia/2001missiles/paras.pdf. 16 September 2002.
51. Turner, Laurie. Ordnance Engineering Manager, Thales Missile Electronics Ltd. NDIA Fuzing Conference PDF file. n.pag. http://www.dtic.mil/ndia/2002fuze/turner.pdf. 25 September 2002.
52. Lockheed Martin Missiles and Fire Control News Release. "GPS, Seeker, Automatic Target Correlator Enable High Accuracy Strikes." n.pag. http://www.missilesandfirecontrol.com/our_news/pressreleases/01pressrelease/021401_Jassm.htm. 25 September 2002.
53. Air Force Research Laboratory Web page PDF File. " JASSM Program Completes Successful Series of Sympathetic Detonation Tests." n.pag. http://www.afrl.af.mil/successstories/2001/warfighter/01-mn-02.pdf. 25 September 2002.
54. Lockheed Martin Missiles and Fire Control News Release. " Navy LOCAAS." n.pag. http://www.missilesandfirecontrol.com/our_products/navalmunitions/NAVY_LOCAAS/product-NAVY_LOCAAS.html. 19 September 2002.
55. United States General Accounting Office Web page. "C-17 Aircraft: Cost and Performance Issues." n.pag. http://www.fas.org/man/gao/gao9526.htm. 18 December 2002.
56. Boeing Web Page. "Boeing Delivers Milestone 100th C-17 to U.S. Air Force." n.pag. http://www.boeing.com/news/releases/2002/q4/nr_021108m.html. 18 December 2002.
57. Project on Government Oversight Organization Web Page. " Fighting with Failures Series: Case Studies of How the Pentagon Buys Weapons: C-17 Airlifter." n.pag. http://www.pogo.org/p/defense/do-020516-failures-c17.html. 18 December 2002.
58. Phillips, Richard A. *R&M (Reliability and Maintainability) quality team concept and C-17 design at Douglas Aircraft Company: An R&M 2000 initiative case study.* MS thesis, AFIT/GLM/88M-12. School of Systems and Logistics, Air Force Institute of Technology, Wright-Patterson AFB OH, March 1988.
59. Air Force Material Command Web Page. "Robins maintainers cut time on C-5 maintenance, inspections."n.pag. http://www.afmc.wpafb.af.mil/HQ-AFMC/PA/news/archive/2002/feb/Robins_C5PDMteamwork.htm. 19 December 2002.
60. Baldridge Web page "Results at Boeing A&TP." PDF file, n.pag. http://www.baldrigeplus.com/Exhibits/Exhibit%20-.%20Results%20at%20Boeing%20A&TP.pdf. 19 December 2002.
61. Kennedy, Harold. "More Lift Needed, Avers U.S. Transportation Chief," *National Defense,* 112:30 (July 2002).

62. Air Force Materiel Command Public Affairs Link. " Missile gets 'go' for low rate production" n.pag. http://www.afmc.wpafb.af.mil/HQ-AFMC/PA/news/archive/2002/jan/Eglin_Missileprod.htm. 25 September 2002.
63. Lockheed Martin Missiles and Fire Control Web Page. "Lockheed Martin Successfully conducts final production tests of guided mlrs rocket." n.pag. http://www.missilesandfirecontrol.com/our_news/pressreleases/02pressrelease/121202_GMLRS.htm. 10 September 2002.
64. Global Security Organization Web page. "C-5 Losses." n.pag. http://www.globalsecurity.org/military/systems/aircraft/c-5-loss.htm. 19 September 2002.
65. Air Combat Command News Service Web Page. "Pilots,maintainers begin training on new weapons system." n.pag. http://www2.acc.af.mil/accnews/apr00/000139.html. 19 September 2002.
66. B-1 Program office Web Page. "Block E Computer upgrade and WCMD, JSOW, JASSM integration Programs." n.pag. http://www.b1b.wpafb.af.mil/pages/block_e/block_e.html 19 September 2002
67. Air Force Link. "School produces C-130 warriors." n.pag. http://www.af.mil/news/Aug2002/83002202.shtml. 19 December 2002.
68. Johnson, W. III, Trickey, C., Forsythe, J.R., Albertson, J., Leigh, E., 2002, "Experimental and Computational Investigation of the Flow behind a C-130 with Tailgate Down," AIAA *02-0713*
69. Serrano, M., Leigh, E., Johnson, W. III, Forsythe, J.R., Morton, S.A, 2002, "Computational Aerodynamics of the C-130 in Airdrop Configurations," AIAA *03-0229*
70. Federation of American Scientists Web Page. "C-130 Hercules " n.pag. http://www.fas.org/man/dod-101/sys/ac/c-130.htm. 22 January 2003.
71. U.S. Air Force Fact Sheet. "C-130 Hercules " n.pag. http://www.af.mil/news/factsheets/C_130_Hercules.html. 22 January 2003.
72. The Aviation Zone Web Page " Lockheed C-130 Hercules" n.pag. http://www.theaviationzone.com/facts/c130.htm. 27 January 2003.
73. United States General Accounting Office Web Page. "Intratheater Airlift: Information on the Air Force's C-130 Aircraft." n.pag. http://www.gao.org/man/gao/nsiad-98-108.htm. 27 January 2003.
74. Federation of American Scientists Web Page. "F-16 Fighting Falcon." n.pag. http://www.fas.org/man/dod-101/sys/ac/f-16.htm. 27 January 2003.
75. Federation of American Scientists Web Page. "F/A-18 Hornet." n.pag. http://www.fas.org/man/dod-101/sys/ac/f-18.htm. 27 January 2003.
76. Federation of American Scientists Web Page. "B-52 Stratofortress." n.pag. http://www.fas.org/nuke/guide/usa/bomber/b-52.htm. 27 January 2003.
77. Federation of American Scientists Web Page. "B-1B Lancer." n.pag. http://www.fas.org/nuke/guide/usa/bomber/b-1b.htm. 27 January 2003.
78. Federation of American Scientists Web Page. "B-2 Spirit." n.pag. http://www.fas.org/nuke/guide/usa/bomber/b-2.htm. 27 January 2003
79. Moir, Ian and Allan Seabridge. *Aircraft Systems: Mechanical, Electrical and Avionics Subsystems Integration.* Virginia: AIAA Education series, 2001.

80. Raymer, Daniel P. *Aircraft Design: A Conceptual Approach.* Virginia: AIAA Education series, 1999.
81. Martin, James N. *Systems Engineering Guidebook : A Process for Developing Systems and Products.* Florida: CRC Press LCC, 2000.
82. Marakas, George M. *Systems Analysis and Design: An Active Approach.* New Jersey: Prentice-Hall, 2001.
83. Rouse, William B. and Kenneth R. Boff. *System Design Behavioral Perspectives on Designers tools and Organizations.* New York: El Sevier Science Publishing Co., Inc., 1987.
84. MOROCCO, John D. "FOAS Eyes Range Of Technologies," *Aviation Week and Space Technology*, 149:93 (September 7,1998).
85. Federation of American Scientists Web Page. "BGM-109 Tomahawk." n.pag. http://www.fas.org/man/dod-101/sys/smart/bgm-109.htm. 21 January 2003.
86. Federation of American Scientists Web Page. "AGM-86C/D Conventional Air Launched Cruise Missile." n.pag. http://www.fas.org/man/dod-101/sys/smart/agm-86c.htm. 21 January 2003.
87. Directory of U.S. Military Rockets and missiles Web Page. "Douglas GAM-87 / AGM-48 Skybolt."n.pag. http://www.designation-systems.net/dusrm/m-48.html. 21 January 2003.
88. City of Lancaster Web Page. "The biography of Lieutenant Colonel Bruce Hinds, USAF (Ret.)" n.pag. http://www.cityoflancasterca.org/Admin/hinds.htm. 21 January 2003.
89. Gunter's Space Web Page. "Minutemen (SM-80 / LGM-30) ICBM."n.pag. http://www.skyrocket.de/space/index_frame.htm?http://www.skyrocket.de/space/doc_lau/minuteman.htm. 21 January 2003.
90. Space Vector Corporation Web Page. "AltAir." n.pag.http://www.spacevector.com/altair.htm. 21 January 2003.
91. The REAL Tom Green Web Page. "The BLU-82B." n.pag. http://www.therealtomgreen.com/blu82.html. 21 January 2003.
92. Federation of American Scientists Web Page. "BLU-82B." n.pag.http://www.fas.org/man/dod-101/sys/dumb/blu-82.htm. 21 January 2003.
93. Guardian Unlimited Network. " Attack on Afghanistan,BLU-82 'Daisy Cutter'." n.pag. http://www.guardian.co.uk/flash/0,5860,588916,00.html. 21 January 2003.
94. Jackson, Jackson S. and Wirtz, Harold G. *Statistics and Strength of Materials*. New York: McGraw-Hill, 1983.
95. Knacke, T.W. *Parachute Recovery Systems. Design Manual*. Santa Barbara, CA: Published by permission of the U.S. Navy (NWC TP 6575) at the Naval Weapons Center, China Lake, CA, 1992.

Vita

First Lieutenant Gurler ARI was born in Corlu, Tekirdag, Turkiye. He started his military life by entering Kuleli Military High School and graduated in 1992. He received the degree of Bachelor of Science in Industrial Engineering from Turkish Air Force Academy in August 1996. Upon graduation, he attended pilot training course and become an F-4E pilot in 1997. He was assigned to 132nd weapons and tactics squadron in Konya, Turkiye and served until 2001. In August 2001, he entered Graduate School of Engineering, Air Force Institute of Technology and graduated in 2003 with a master's degree in space operations.

REPORT DOCUMENTATION PAGE

Form Approved
OMB No. 074-0188

The public reporting burden for this collection of information is estimated to average 1 hour per response, including the time for reviewing instructions, searching existing data sources, gathering and maintaining the data needed, and completing and reviewing the collection of information. Send comments regarding this burden estimate or any other aspect of the collection of information, including suggestions for reducing this burden to Department of Defense, Washington Headquarters Services, Directorate for Information Operations and Reports (0704-0188), 1215 Jefferson Davis Highway, Suite 1204, Arlington, VA 22202-4302. Respondents should be aware that notwithstanding any other provision of law, no person shall be subject to an penalty for failing to comply with a collection of information if it does not display a currently valid OMB control number.
PLEASE DO NOT RETURN YOUR FORM TO THE ABOVE ADDRESS.

1. REPORT DATE *(DD-MM-YYYY)*	2. REPORT TYPE	3. DATES COVERED *(From – To)*
25-03-2003	**Master's Thesis**	Sep 2001 – Mar 2003

4. TITLE AND SUBTITLE
CARGO AIRCRAFT BOMBING SYSTEM (CABS)

5a. CONTRACT NUMBER
5b. GRANT NUMBER
5c. PROGRAM ELEMENT NUMBER

6. AUTHOR(S)
Ari, Gurler, 1LT, TUAF

5d. PROJECT NUMBER
5e. TASK NUMBER
5f. WORK UNIT NUMBER

7. PERFORMING ORGANIZATION NAMES(S) AND ADDRESS(S)
Air Force Institute of Technology
Graduate School of Engineering and Management (AFIT/EN)
2950 P Street, Building 640
WPAFB OH 45433-7765

8. PERFORMING ORGANIZATION REPORT NUMBER
AFIT/GSO/ENY/03-01

9. SPONSORING/MONITORING AGENCY NAME(S) AND ADDRESS(ES)
Air Force Institute of Technology
Graduate School of Engineering and Management (AFIT/EN)
2950 P Street, Building 640
WPAFB OH 45433-7765

10. SPONSOR/MONITOR'S ACRONYM(S)
11. SPONSOR/MONITOR'S REPORT NUMBER(S)

12. DISTRIBUTION/AVAILABILITY STATEMENT
APPROVED FOR PUBLIC RELEASE; DISTRIBUTION UNLIMITED.

13. SUPPLEMENTARY NOTES

14. ABSTRACT

From the early days of aviation, bombs typically have been carried by either fighter or bomber aircraft in the inventory. On the other hand, more and more long-range, precision-guided missiles are being produced with ranges that vary from tens to hundreds of miles. The mass delivery of stand-off weapons could be especially advantageous in the early phases of an air campaign. This study considers the use of cargo aircraft for carrying and launching bombs and missiles. Most cargo aircraft can carry more missiles than many bomber and fighter aircraft. If stand-off missile launching capability could be economically developed for cargo aircraft, fighter and bomber aircraft would be more readily available to deliver unguided bombs and/or laser-guided bombs.

15. SUBJECT TERMS
Cargo Bombing System, Aerial Delivery, Air Launched Missiles

16. SECURITY CLASSIFICATION OF:			17. LIMITATION OF ABSTRACT	18. NUMBER OF PAGES	19a. NAME OF RESPONSIBLE PERSON
a. REPORT	b. ABSTRACT	c. THIS PAGE			Prof. Dr. Milton Franke, AFIT (ENY)
U	U	U	UU	106	**19b. TELEPHONE NUMBER** *(Include area code)* (937) 785-3636 ext 4720; e-mail: milton.franke@afit.edu

Standard Form 298 (Rev. 8-98)
Precribed by ANSI Std. Z39-18